Remote elderly live alarm and positioning management system

By

Fengzhe Li (U2180177)

A dissertation presented to College of Photonic and Electronic Engineering

Fujian Normal University,

the School of Computing and Engineering

University of Huddersfield, UK.

In partial fulfilment of the requirements for the Final Year Project Module (NHP2400)

Academic Year: 2024

By submitting this work I confirm that it is entirely by own and adheres to all the academic integrity guidelines set out by the University.

Abstract

With the aging of the population accelerated, the elderly falls become one of the common accidents in life, the number of Alzheimer's disease patients also continue to show an upward trend, how to provide the elderly with a healthier and safer life has become a hot topic. In this project, we designed a device to remotely monitor the real-time situation of the elderly, using ADXL345 three-axis acceleration sensor to detect the human body acceleration data in real time, MAX30102 heart rate oximetry sensor and DS18B20 temperature sensor to collect the heart rate oximetry and temperature, the collected data will be transmitted to the microcontroller, the STM32F103C8T6 through the pre-set algorithms for judgment. If it meets the conditions of fall occurrence, or the physiological data such as body temperature, heart rate, blood oxygen and so on exceeds the set threshold, then it will be alarmed by buzzer and SMS in two ways. In order to allow better interaction between the user and this design, GPS positioning technology is also applied in the design of the SMS alarm, which can send the geographic location of the wearer to the guardian.Details such as active button alarm and manual cancel alarm design.

Table of Contents

Abstract ii

Table of Contents iii

List of Tables v

List of Figures vi

List of Abbreviations viii

1 Introduction 1

1.1 Research background and significance 1

1.2 Research status and trend 2

1.3 Feasibility analysis 3

2 Relevant theoretical basis 5

2.1 Overall system design program 5

2.2 System working principle and functional requirements 6

2.2.1 STM32 microcontroller 6

2.2.2 Heart rate sensor working principle 8

2.2.3 Temperature sensor working principle 8

2.2.4 OLED display working principle 9

2.2.5 Principle of operation of triaxial acceleration sensors 10

2.2.6 GSM module working principle 10

3 System Hardware Circuitry 12

3.1 General circuit schematic of the system 12

3.2 Main module circuit design 13

3.2.1 Schematic diagram of the microcontroller 13

3.2.2 Power supply circuit design 14

3.2.3 DS18B20 temperature sensor circuit principle 15

3.2.4 Heart rate sensor circuit design 15

3.2.5 Alarm circuit design 16

3.2.6 Design of the GSM circuit 16

3.2.7 ADXL345 design of triaxial acceleration circuits 17

3.2.8 Pushbutton circuit design 17

3.2.9 GPS circuit design 18

4 System software 19

4.1 Main program flow 19

4.2 OLED liquid crystal display subroutine 20
4.3 Buzzer alarm subroutine 21
4.4 Heart Rate Oxygen Sensor Subroutine 21
4.5 Temperature sensing subroutine 22
4.6 ADXl345 3-axis acceleration module subroutine 23
4.7 GPS positioning subroutine 24
4.8 GSM SMS module subroutine 25
5 Results of system functionality testing 27
5.1 Results of proteus simulation test 27
5.2 Results of physical operation test 30
6 Discussion and Conclusion 38
7 References 39
8 Appendix 41
8.1 Total Circuit Design 41
8.2 Component list 42

List of Tables

Table 1 Configuration register settings 9
Table 2 Startup mode 14

List of Figures

Figure 1 Hardware architecture module for remote elderly live alert and location management system 3
Figure 2 Block diagram of the overall design of the remote elderly live alert and location management System 5
Figure 3 Remote elderly live alert and location management system workflow diagram 6
Figure 4 STM32 microcontroller physical diagram 7
Figure 5 STM32 microcontroller kernel diagram 7
Figure 6 STM32 microcontroller system structure diagram 8
Figure 7 Internal block diagram of the chip 8
Figure 8 OLED working principle diagram 9
Figure 9 Functional block diagram of ADXL345 internal structure 10
Figure 10 Physical model of the G-Cell sensor 10
Figure 11 Triple measurement axial Definition diagram for ADXL345 10
Figure 12 GSM system structure 11
Figure 13 Circuit schematic PCB version 12
Figure 14 Circuit schematic 13
Figure 15 STM32 microcontroller diagram 13
Figure 16 STM32 microcontroller minimum system circuit diagram 14
Figure 17 Power supply circuit design diagram 15
Figure 18 Design diagram of DS18B20 15
Figure 19 Circuit diagram of the MAX30102 heart rate oximetry sensor 16
Figure 20 Alarm circuit 16
Figure 21 GSM module circuit 16
Figure 22 IIC connection diagram 17
Figure 23 Sensor connection module 17
Figure 24 Pushbutton circuit design diagram 18
Figure 25 GPS positioning module 18
Figure 26 Main program 19
Figure 27 Data Bit validity provisions 20
Figure 28 Liquid crystal display program flow chart 20
Figure 29 Buzzer alarm subroutine flowchart 21
Figure 30 Heart rate oximetry sensor subroutine flowchart 22
Figure 31 Temperature detection flowchart 23
Figure 32 Flowchart of the triaxial acceleration module 24
Figure 33 GPS flowchart 25
Figure 34 GSM SMS module flowchart 26
Figure 35 Proteus simulation diagram 27
Figure 36 Fall simulation chart 27
Figure 37 Heart rate simulation chart 28
Figure 38 Plot of data changes for heart rate simulation 28
Figure 39 Oxygen simulation chart 29
Figure 40 GSM and GPS display results chart 29
Figure 41 Concrete drawing 30

Figure 42 Red light is always on when the heart rate sensor is working.....30
Figure 43 Display module and microcontroller module testing 31
Figure 44 SIM800C working scenario.....31
Figure 45 External power supply for SIM800.....32
Figure 46 Physical drawing of an elderly person falling down and getting up 32
Figure 47 SMS received by the old man after falling and crawling 33
Figure 48 Physical diagram of holding down the fourth button.....33
Figure 49 Receiving SMS after seeking help 34
Figure 50 Heart rate threshold modification interface.....34
Figure 51 Alarm SMS received when heart rate exceeds the threshold value.....35
Figure 52 Blood oxygen threshold modification interface 35
Figure 53 Alarm SMS received when blood oxygen exceeds the threshold value 35
Figure 54 Temperature threshold modification interface.....36
Figure 55 Alarm SMS received when body temperature exceeds the threshold value 36
Figure 56 Designated receiving SMS phone number modification interface.....37
Figure 57 Different experimental results of GPS module indoors and empty outdoors.....37
Figure 58 Component list.....42

List of Abbreviations

Abbreviation	Description
MSC	Mobile switching center
HLR	Home location register
AUC	Authentication center
VLR	Visiting location register
BSC	Base station controller
BTS	Base transceiver station
MS	Mobile station
EIR	Equipment Identity Register
SMC	Short message center
VM	Voice mailbox
PMC	Peration and maintenance center
SMS	Short Messaging Service
SVM	Support Vector Machine
GSM	Global System for Mobile Communications
GPS	Navigation Satellite Timing And Ranging Global Position System
SIM	Subscriber Identity Module
PPG	Photoplethysmographic

1 Introduction

1.1 Research background and significance

According to the World Health Organization, globally about 3,640,000 people are injured in falls each year, and about 63,000 of them die. And falls are one of the leading causes of injury and death among people aged 65 and older. China's population is aging due to the fact that as fertility rates decline and longevity levels increase, the country's population is aging. According to the National Bureau of Statistics, as of 2020, China's population aged 60 and above has reached 265 million, accounting for 18.7% of the total population. The number of elderly population is huge and shows a trend of increasing year by year. It is estimated that by 2035, China's population aged 60 and above will exceed 400 million, the highest in the world, and the speed of aging in China is much faster than the world average.

According to the China Aging Development Report, the number of Alzheimer's patients in China has shown an increasing trend since 1990. It is estimated that by 2020, the number of Alzheimer's patients in China will be approximately 11 million. It is expected that the number of Alzheimer's patients will further increase as China's population ages. How to protect the health of the elderly and how to improve their quality of life have become hot topics (Su, Y. Huang, Z. & Wen, R., 2023).

With the deepening of population aging, the health and safety of the elderly has become a growing concern for all sectors of society. Falls among the elderly are one of the common accidents in the daily life of the elderly, and the World Health Organization reports that globally, more than 300,000 people die from falls every year, half of whom are over 60 years old. In China, falls have become the "number one killer" of elderly people over 65 years of age who die from injuries. The Beijing Municipal Center for Disease Control released the results of a sample survey showed that: the annual incidence of falls in the elderly aged 60 to 69 years is 9.8%, 70 to 79 years old is 15.7%, 80 years old and above is 22.7%, every increase of 10 years old, the incidence of falls will increase by about 0.5 times.

Creating a barrier-free environment for the elderly around us reduces the occurrence of falls, so the development of a fall alarm system for the elderly can raise the society's concern for the health of the elderly. Protecting the health and improving the quality of life of the elderly has become a top priority in the research of related products. Elderly fall is one of the common accidents in the daily life of the elderly. Therefore, it is of great significance to develop a fall alarm system for the elderly. Elderly people also often get lost due to cognitive decline or other reasons, which brings great anxiety and disturbance to their families. The alarm system with the lost location tour function can track the location of the elderly in real time, no matter where the elderly are, press the device button, can quickly locate and notify the family or relevant rescue personnel to find the elderly in time to reduce the safety risk. In addition, with the help of sensors and intelligent monitoring devices, the alarm system is also able to monitor the physiological conditions of the elderly in real time, including heart rate, blood pressure, body temperature and other indicators. Therefore, monitoring through the use of the elderly fall alarm system can help to detect the physical abnormalities of the elderly in a timely manner, thus reducing the safety risks, and can take timely intervention and treatment measures to improve their quality of life and health.

Therefore, the development and application of elderly fall alarm systems can provide round-the-clock health monitoring and safety protection for the elderly, providing greater peace of mind for the elderly and their families. Such a system helps to prolong the autonomous living time of the elderly and improve their quality of life.

1.2 Research status and trend

Some domestic companies and research organizations have made positive contributions to the research of fall detection equipment for the elderly. For example, Xi'an Zhongxing Measurement and Control Co., Ltd, the Institute of Automation of the Chinese Academy of Sciences, Huawei Technologies Co., Ltd, and Xiaomi Technology are researching intelligent fall detection devices for the elderly. These devices usually combine advanced technologies such as sensor technology, artificial intelligence algorithms and cloud computing to monitor the activity status of the elderly in real time, detect falls in a timely manner and provide early warning and rescue. Although similar products in China are still in the early stages, they are still being continuously explored and improved.

Countries such as the United States, on the other hand, are actively working on humanization research centered on improving the quality of life of the elderly. The focus of these studies includes real-time monitoring of the posture of the elderly and the development of fall prevention technologies.

There are three types of fall detection technologies for the elderly that are most commonly used:

(1) The first is an image-video based approach, where a camera takes an active image of the human body, or a camera or infrared-aligned probe is installed in a home where falls are likely to occur, and a computer vision system is used to determine the human posture, which is analyzed by an algorithm to determine the state of the human body in order to detect a fall. For example, the method designed by Canadian Caroline Rougier combines computer(Qin, Y., 2013)vision analysis of human morphological changes and movement processes to recognize falls. The advantage is that the determination of falls is more accurate and the response is more timely, the disadvantage is that the user's personal privacy is not well protected, which is still a problem to be solved, and the installation cost is high and subject to certain limitations.

(2) Based on the analysis of audio signals, this detection technology is an emerging method of human fall detection. This technology mainly analyzes the sound signal generated when the human body falls, so as to determine whether the human body falls. The most commonly used audio analysis techniques include signal processing, feature extraction and classification. The advantage is that it has high accuracy and real-time performance, but it is easily affected by environmental noise and other disturbing factors. The disadvantages of analyzing the frequency of vibration caused by the impact of a fall are more obvious its adaptability and correctness is poor, and the cost is high, generally will not be used as the main basis for the main judgment of the elderly fall, mainly used as an auxiliary means of other detection methods;

(3) Wearable-based detection device, that is, the detection and alarm device worn on the user's body, through the built-in wearable device in the tiny sensor device and microcontroller processor sensor detection data, able to monitor the human body at any time in a variety of states, the microcontroller using the sensed sensor data, and then combined with the relevant algorithms of the fall detection fall judgment, and then use the algorithms to analyze the human body posture and automatically send out an alarm (Pei, L., 2017). At present, there are two main methods based on plantar pressure sensors and wearing acceleration sensors. This method has better flexibility and can be better integrated into daily life.

1.3 Feasibility analysis

In this project, MAX30102 heart rate and blood oxygen sensor and DS18B20 temperature sensor, STM32 microcontroller and OLED LCD display and other main hardware modules are selected to form a remote elderly real-time alarm and positioning management system as shown in Figure 1.

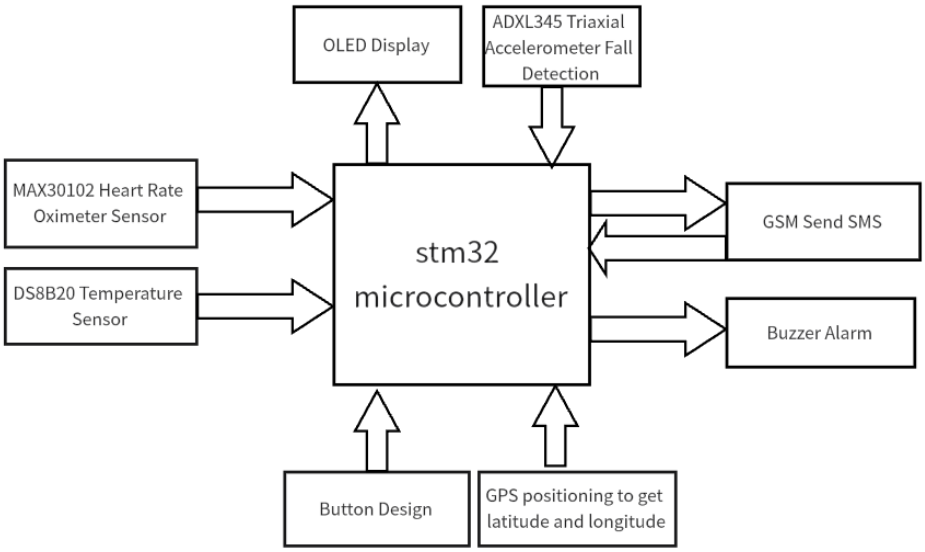

Figure 1 Hardware architecture module for remote elderly live alert and location management system

(1) Heart rate and blood oxygen sensor part

MAX30102 measures heart rate and blood oxygen concentration through photoelectric method by detecting the difference of different body tissues in light transmission, thus achieving the purpose of pulse measurement. Compared with the traditional way of measuring ECG signal or blood pressure sensor, this method has the advantages of easy operation, comfortable wearing, stable measurement and high accuracy. It does not need to be worn for a long time and does not cause restrictions or discomfort to the activities of the person being measured, so it is more popular among people.

(2) Acceleration sensor part

The advantage of ADXL345 axis plus speed is that it has high resolution and is able to detect small changes in inclination; it has a variety of detection functions: one type of sensor can measure static gravity acceleration and dynamic gravity acceleration at the same time it can detect whether a fall is made or not by setting up an established threshold value.

(3) Temperature sensor part

DS18B20 has a wide range of temperature measurement: -20℃～100℃. It is one of the best temperature sensors available, with high measurement accuracy, speed, small size, portability and reliability.

(4) Microcontroller part

STM32F103C8T6 microcontroller has low energy consumption, low price, rapid analysis of data, stable signal output, rich peripherals and available software resources, and can be used as the core processor for a variety of applications.

(5) GSM communication module

SIM800 SMS transmission module has the advantages of easy to carry, small size, low price, can realize remote data transmission, SMS sending speed faster advantages.

2 Relevant theoretical basis

2.1 Overall system design program

This design uses an STM32 microcontroller as the core to build a remote elderly live alarm and location detector. The core component of the system is the STM32F103CT86 minimum system board microcontroller, which is integrated with the DS18B20 temperature sensor and the MAX30102 heart rate oximetry sensor to realize the real-time monitoring and measurement of the elderly's body temperature, heart rate and blood oxygen concentration. Through the cooperation of STM32 for pulse counting and accumulation and OLED display, the system is able to accurately display and output various monitoring data. Using the ADXL345 three-axis acceleration sensor, the motion status can be judged at this time. Judgement of the fall is detected using the threshold method, if the combined acceleration exceeds a certain value, it can be judged that the fall has occurred, STM32 will be the latter through the GPS positioning system to derive the specific location information of the current position, and displayed on the OLED LCD screen. If the old man does not get up for a period of time, the system will trigger a buzzer to sound an alarm and send a text message to the preset cell phone number through the SIM800 module, carrying the monitored latitude and longitude, heart rate and body temperature data. The system also has buttons for setting the alarm threshold, the cell phone number to receive the SMS, and for canceling the alarm function for false touches. If the elderly get lost or have an unexpected situation they can press the designated button themselves, which will lead them directly to the buzzer alarm and SMS alert.

Overall, the design combines a variety of sensors and communication modules, and realizes the comprehensive monitoring and alarming of the elderly's health condition and location through STM32 microcontroller, which provides a reliable guarantee for the safety of the elderly. After comprehensive testing, the system has successfully realized the expected functions with simple structure, low power consumption, fast response speed, moderate accuracy, and compact size, which is easy to carry. Its output is stable and clearly visible and shows good performance.

The overall design block diagram and flow chart are shown in Figure 2 and Figure 3 respectively.

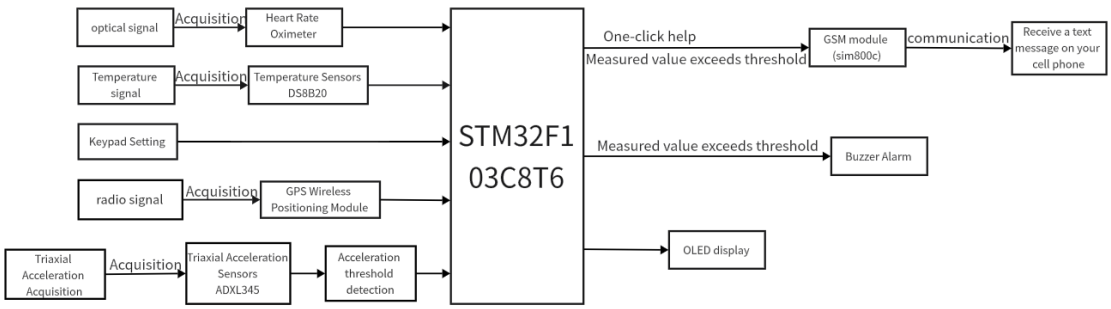

Figure 2 Block diagram of the overall design of the remote elderly live alert and location management System

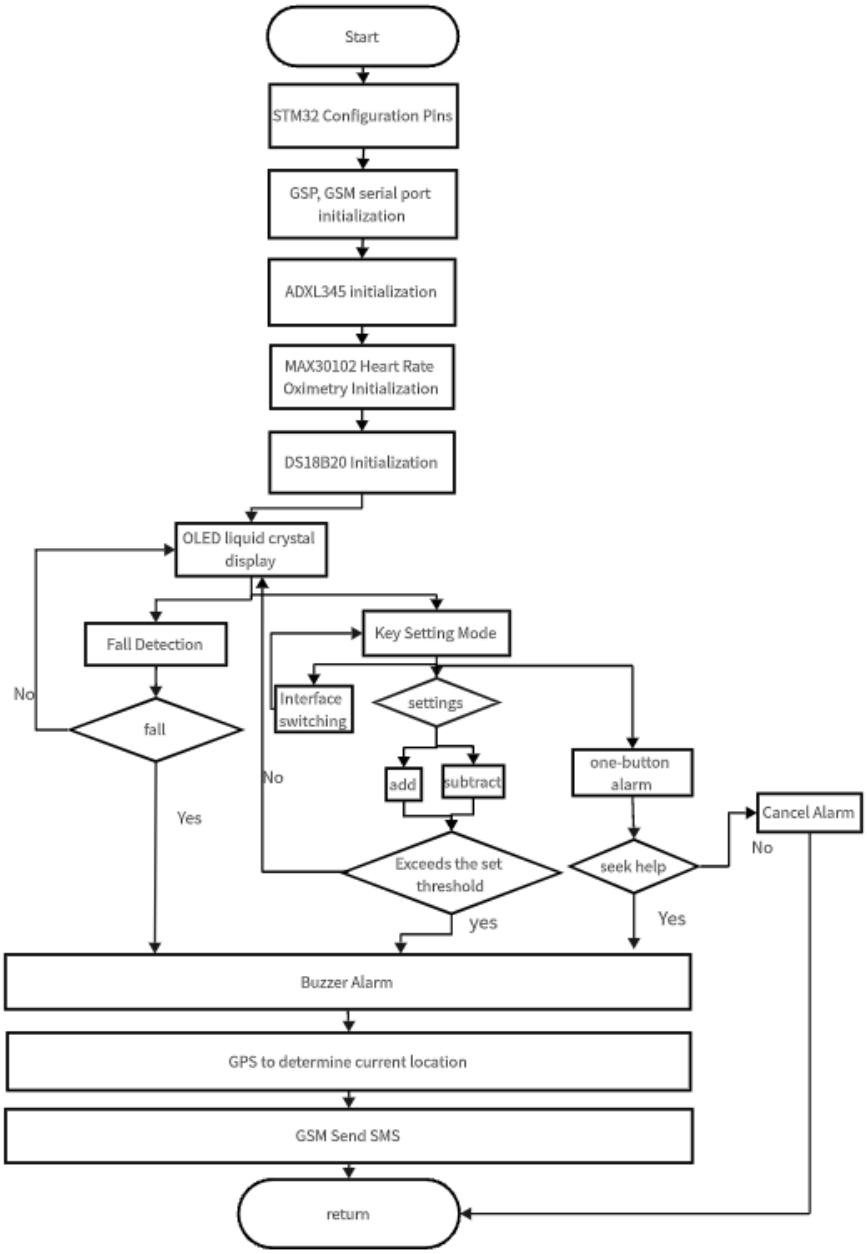

Figure 3 Remote elderly live alert and location management system workflow diagram

2.2 System working principle and functional requirements

2.2.1 STM32 microcontroller

The STM32 uses the ARM Cortex-M3 core, which has strong computing power and response speed, with a maximum frequency of 72 MHz. it operates from 2.0 V to 3.6 V, and is suitable for a wide range of power supply environments, with a low variety of power-saving features and a wide range of peripheral interfaces. Figure 6 shows, in the upper left corner, a 32-bit microcontroller developed by ST based on the ARMCortex-M core, which is widely used in embedded systems and contains three key buses: the ICode instruction bus, the DCode data bus, and the System bus (Zhang, Y., 2014).

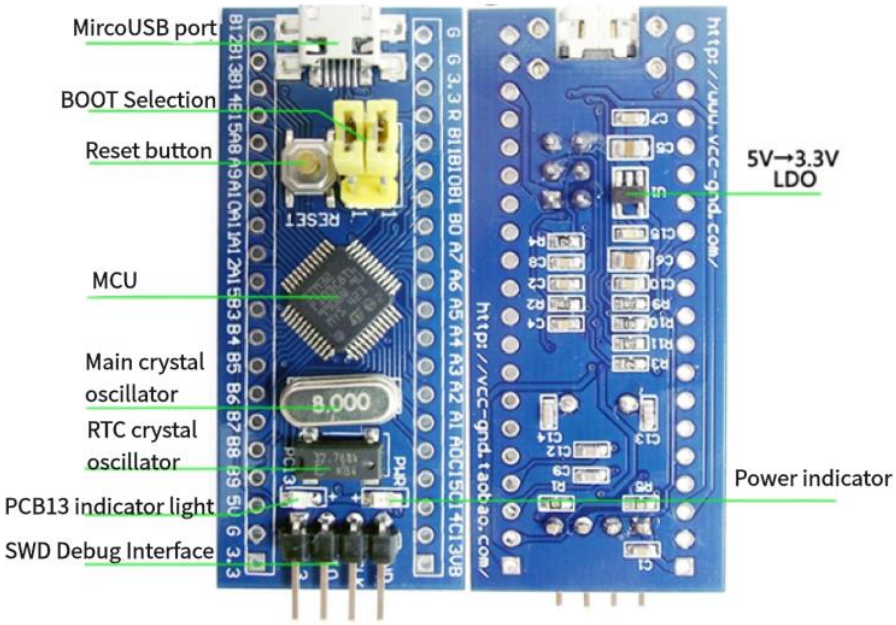

Figure 4 STM32 microcontroller physical diagram

With a high clock frequency, rich peripheral interfaces and large storage capacity, the STM32F103C8T6 microcontroller has high performance and rich functionality for a variety of complex applications. In order to prolong the use of the device, especially for long-running functions such as fall detection for the elderly, heart rate detection and body temperature detection, it is crucial to choose a microcontroller with low power consumption. It is suitable for long time running applications and meets the experimental requirements, so STM32F103C8T6 is chosen.Figures 5 and 6 show the STM32 kernel diagram and structure diagram.The physical diagram of STM32 microcontroller is shown in Figure 4.

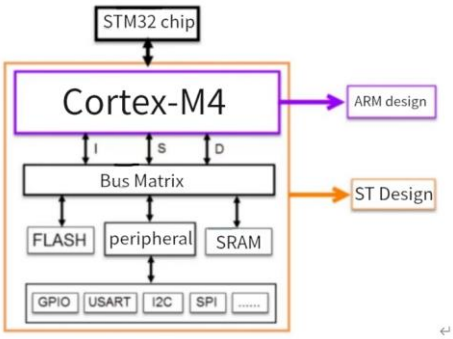

Figure 5 STM32 microcontroller kernel diagram

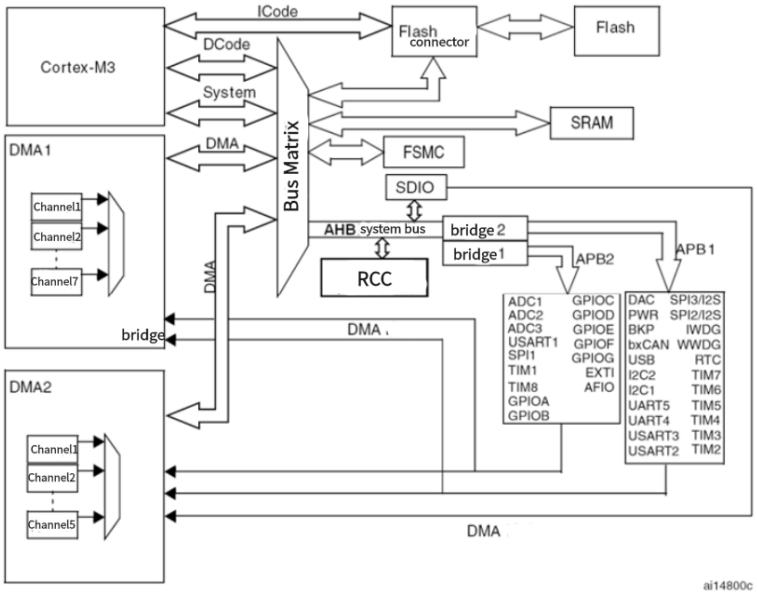

Figure 6 STM32 microcontroller system structure diagram

2.2.2 Heart rate sensor working principle

From the block diagram shown in Figure 7, the chip is divided into two parts: analog signal acquisition and digital processing. The analog part uses RED and IR lamps to collect the reflected light signal from the human body, which is converted to an electrical signal by a photodiode and converted to a digital signal by an 18-bit ADC(Yang, G., 2021) ; DIGITALPARTY receives the raw data, which is filtered and processed and stored in a buffer, and then reads and writes the data and processes it through the IIC interface by the microcontroller and internal registers(Yang, G., 2021).

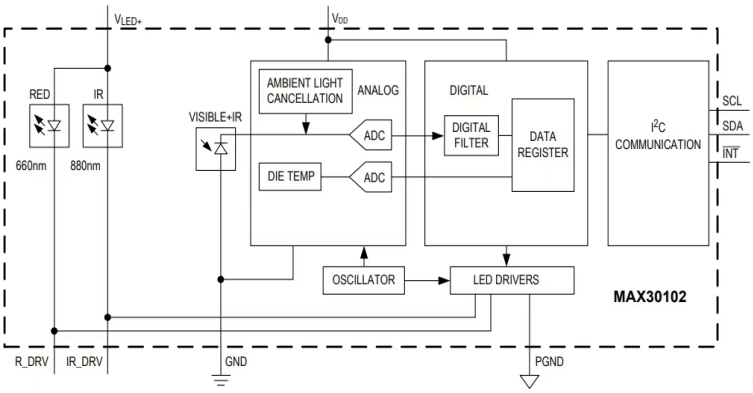

Figure 7 Internal block diagram of the chip

2.2.3 Temperature sensor working principle

DS18B20 temperature convertible precision 9-12 bit programmable (Zhang, J., & Chen, H., 2010), easy to use; because of the support of the data line power supply, effectively reducing the operating power consumption; data transmission to achieve a single line bidirectional, because the digital output using a single I / O port, without additional A/D conversion and additional external originals, so that the size of the smaller, simpler circuit, more convenient to carry.

(1) DS18B20 Temperature Measurement Principle

The sensor contains two oscillators with different temperature coefficients, and its output signal is counted and compensated (Cui, H., 2013), and the temperature value is stored in the internal memory in the form of 16-bit binary complement. The host can obtain the actual measured temperature value by reading the data in the sensor memory and processing it accordingly.

The DS18B20 provides different configuration options for realizing different temperature display resolutions. As shown in Table 1. Setting the combination of positioning R1, R0, you can choose a different number of bits of the temperature display.R1 and R0 is the key position of the temperature, different combinations, the temperature display length is different, including 9, 10, 11, 12-bit, so as to achieve the resolution of the temperature display. The default configuration at the time is 12 bits for factory configuration (Liu, X., & Zhang, Y., 2019). Non-volatile electrically erasable memory is used for temperature alarm trigger construction and register settings (Wu, J., 2007).

Table 1 Configuration register settings

R_1	R_0	resolution ℃	Maximum conversion time ms	valid digits
0	0	0.5	93.75	9-bit（Bit11~Bit3）
0	1	0.25	187.50	10-bit（Bit11~Bit2）
1	0	0.125	375.00	11-bit（Bit11~Bit1）
1	1	0.0625	750.00	12-bit（Bit11~Bit0）

2.2.4 OLED display working principle

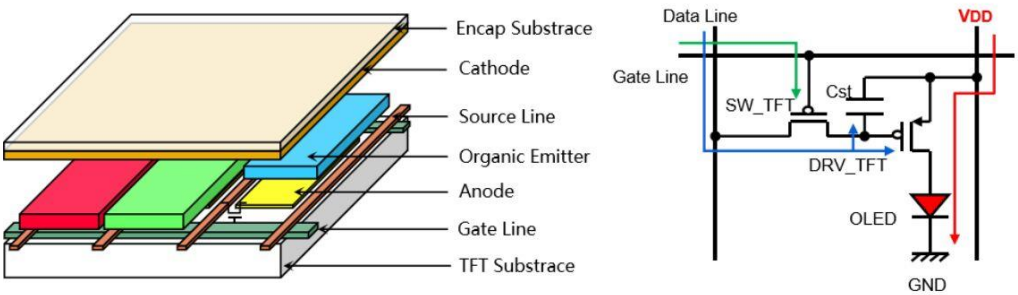

Figure 8 OLED working principle diagram

A common Matrix arrangement is used, located at the intersection of anode and cathode (Chen, Q., 2010), and the lighting state of each OLED is realized by controlling the current at each intersection. Since it is a current-based device, the display brightness can be realized by adjusting the current.

Each material bit of RAM corresponds to the brightness condition of 1 Pixel point on the OLED screen, which uses an 8-bit parallel data interface, and can have the corresponding order to read and write operations directly with the 8-bit microprocessor. It is characterized by high contrast, fast response, clear results and low power consumption (Li, Y., 2008).

2.2.5 Principle of operation of triaxial acceleration sensors

The internal design of the ADXL345 is shown in Figure 9, and after processing by capacitive-voltage converters, gain amplifiers, and filters (Zhang, F., 2009), the acceleration data from the three G-CELL sensors are finally output as voltage signals.

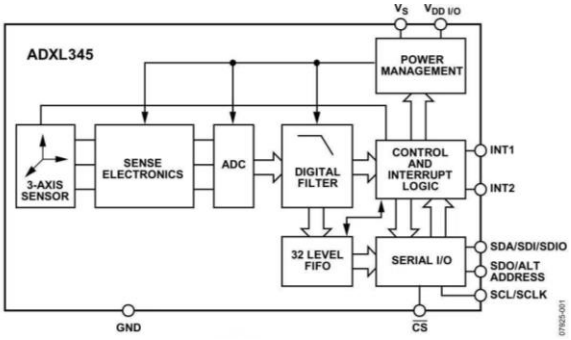

Figure 9 Functional block diagram of ADXL345 internal structure

G-CELL sensor, the capacitive pole plate in the center will deviate from its original position when acceleration is applied to the sensor and the capacitance value changes. This change is processed by capacitance-voltage conversion, gain amplification, filtering, etc., and is converted to a voltage output in order to accomplish the task of accurately measuring acceleration.

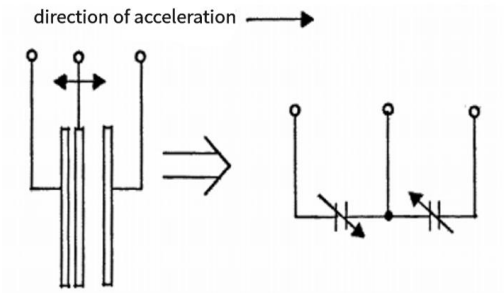

Figure 10 Physical model of the G-Cell sensor

The ADXL345 sensor is capable of capturing three directions of human motion, which are X-axis, Y-axis and Z-axis. The data in these directions reflect the dynamics of the human body in space and provide important information for understanding human motor behavior.

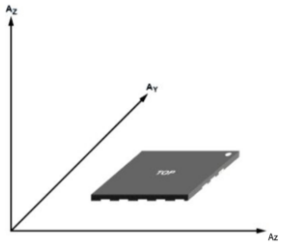

Figure 11 Triple measurement axial Definition diagram for ADXL345

2.2.6 GSM module working principle

The GSM module integrates RF, baseband, storage and amplifier functions required for GSM communication with an independent operating system (Su, R., 2010). It can be used for SMS, voice

calls and data transmission, network communication, etc. It can become a cell phone by just adding a keypad, display and battery.

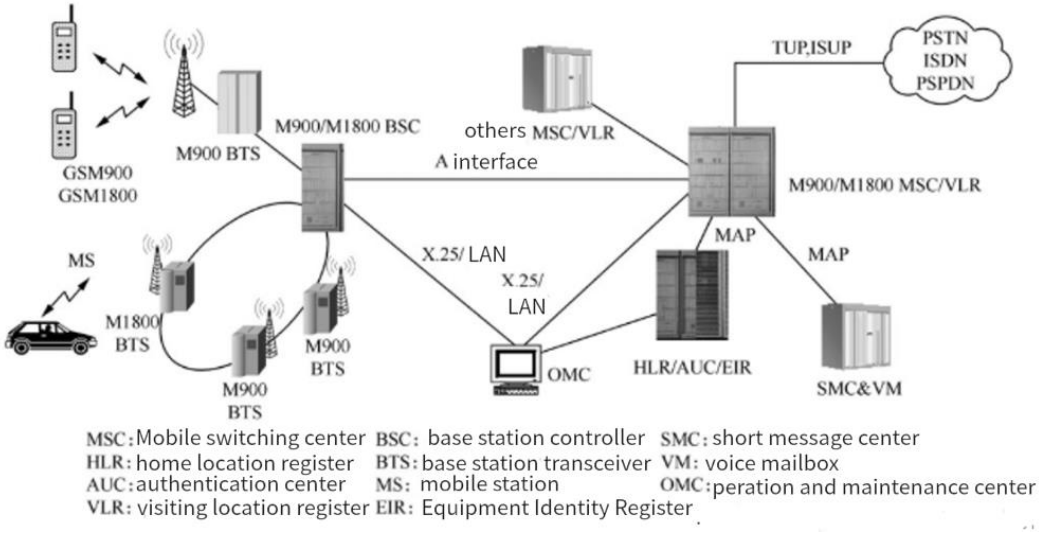

Figure 12 GSM system structure

3 System Hardware Circuitry

3.1 General circuit schematic of the system

Carry out the overall design of the system hardware, where the ADXL345 is connected to pins A6 and A7 of the STM32F103C8T6, the DS18B20 temperature sensor is connected to pin A11 of the STM32, GPS is connected to pin B11 of the STM32, and the GSM module is connected to port A9 A10.

Design a separate control switch and a separate power supply interface for the GSM module, and the rest of the devices are controlled by the main switch and powered through the main power supply.

The circuit connection schematic of the system is shown in Figure 13 and Figure 14.

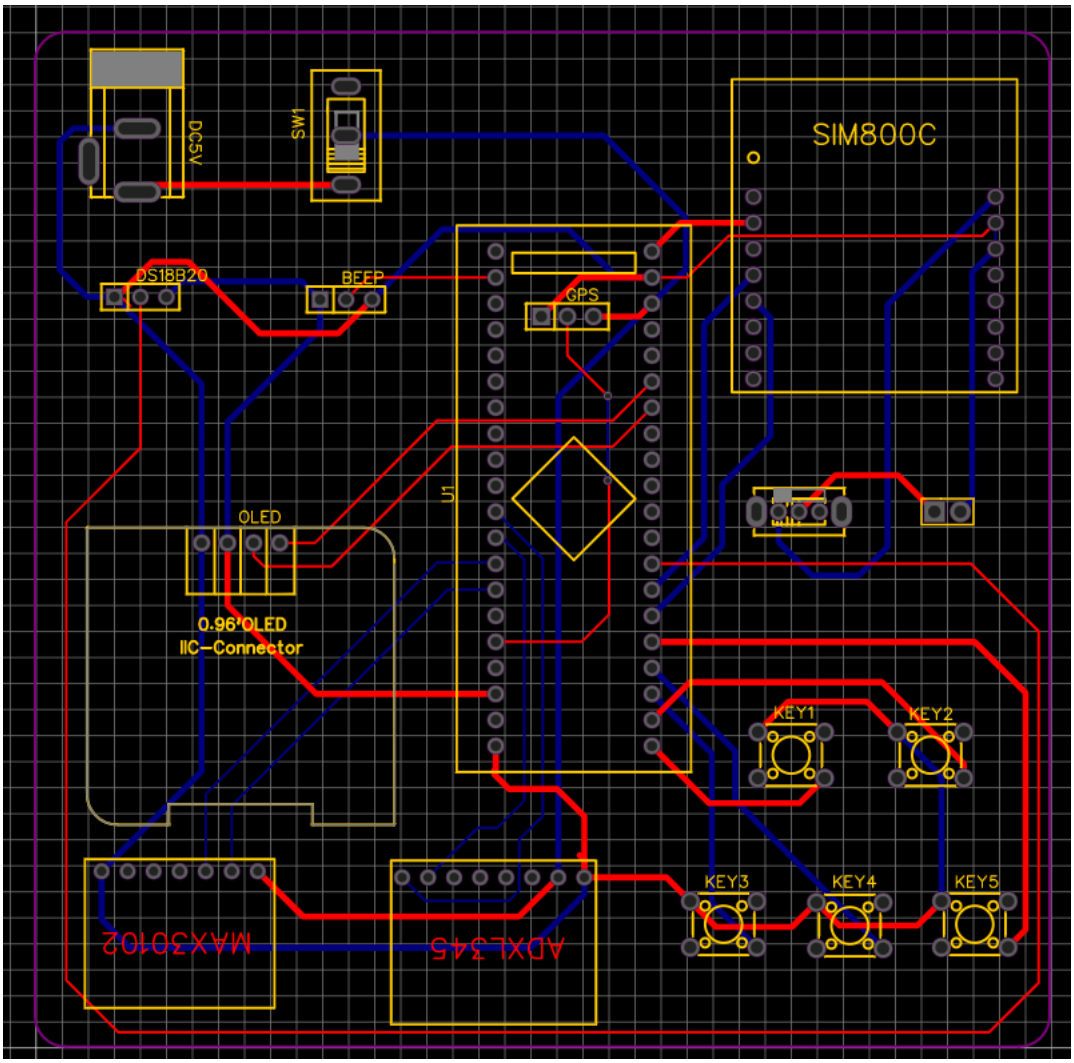

Figure 13 Circuit schematic PCB version

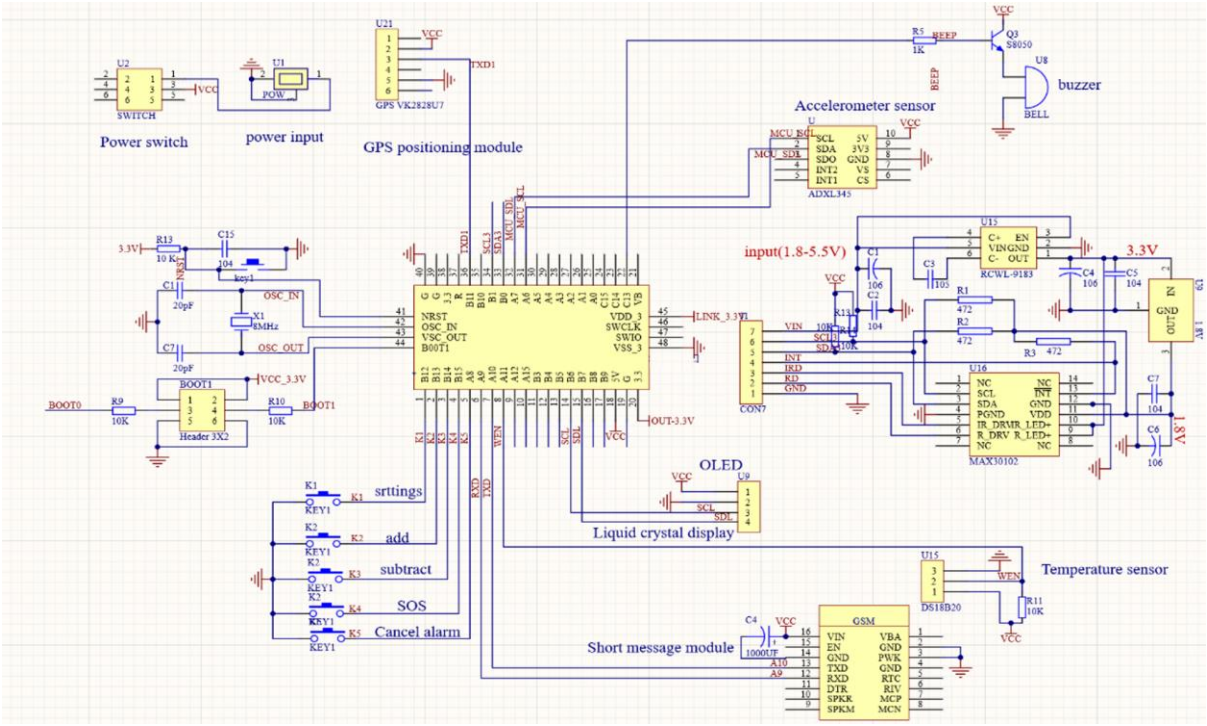

Figure 14 Circuit schematic

3.2 Main module circuit design

3.2.1 Schematic diagram of the microcontroller

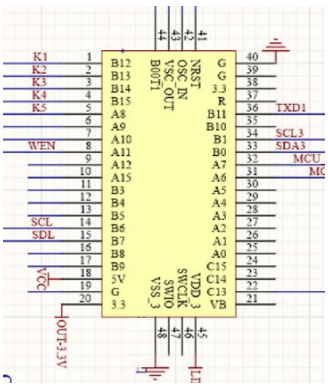

Figure 15 STM32 microcontroller diagram

STM32 minimum system circuit, as shown in Figure 16, usually includes the crystal, reset, startup configuration, download port and STM32 and power supply these basic parts:

(1)STM32 microcontroller core: this is the core component of the system using ARMCortex-M microcontroller chip.

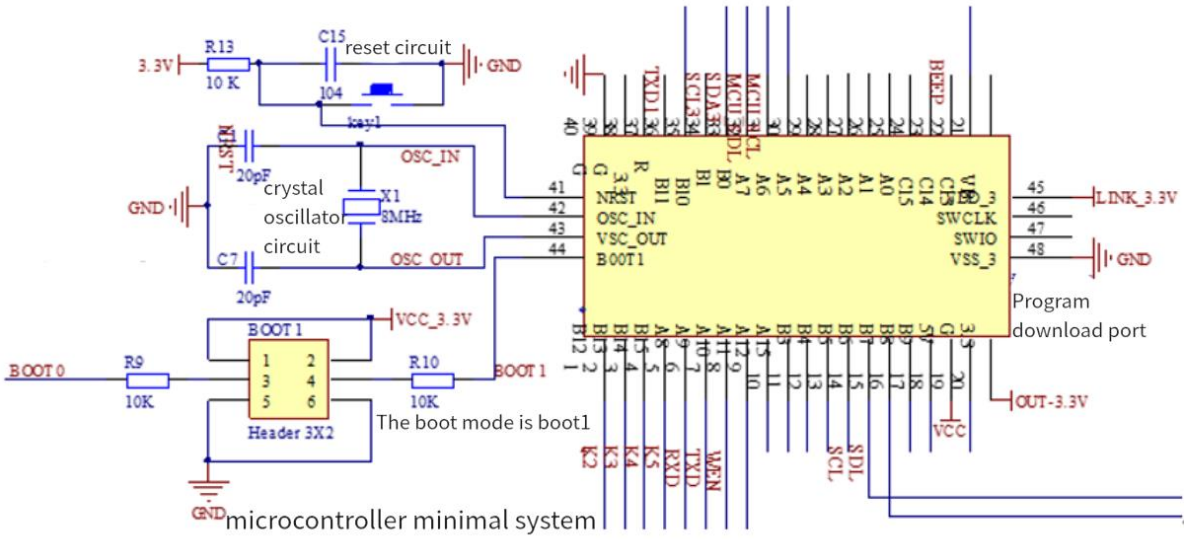

Figure 16 STM32 microcontroller minimum system circuit diagram

(2) crystal: used to provide clock signals to the microcontroller, usually a 4-16MHz crystal.STM32 microcontrollers generally support external crystal and internal RC oscillator two kinds of time source.

3) Power supply circuit: including power supply filter capacitor, voltage regulator circuit, etc., to provide stable working voltage STM32 chip.

4) Reset circuit: including reset button and pull-up resistor, used to reset STM32 chip manually or by external signal.

5) Download interface: SWD (Serial Wire Debug) interface, JTAG (Joint Test Action Group) interface.

The boot mode is shown in Table 2. For example, with Boot1 boot mode, when the Boot1 pin is in a specific state, the microcontroller will load the program from a different source at startup.

Table 2 Startup mode

Startup Mode Selection Pin		activation mode	clarification
BOOT1	BOOT2		
X	0	main flash memory	Select main flash memory as boot area
0	1	system memory	Select system memory as boot area
1	1	internal SRAM	Select internal SRAM as boot area

3.2.2 Power supply circuit design

The microcontroller is powered by DC 5V and the microcontroller is powered by a 3-pin power holder and a 6-pin power gate. The power pedestal is connected to an external power plug and the power switch controls the switching state of the microcontroller circuit (Ma, J., Tang, L., & Wu, Y.,

2022). In this case, the 2-port pin is connected to the ground and the 1-port pin is connected to the 3-port pin of the power switch.(Yang, N., Chen, Y., & Yang, J., 2021).

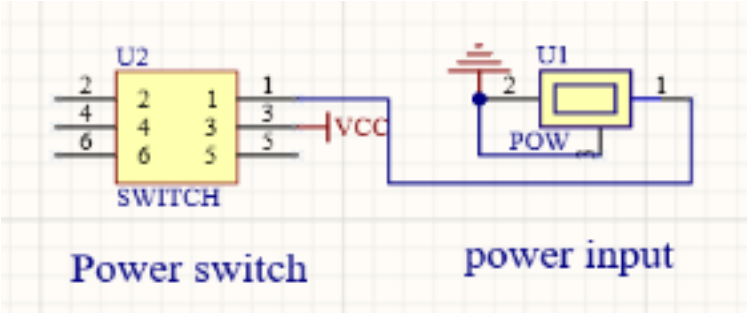

Figure 17 Power supply circuit design diagram

3.2.3 DS18B20 temperature sensor circuit principle

1）DS18B20 circuit design

First determine the power supply voltage, we need to select the appropriate power supply voltage according to the actual demand, usually between 3V and 5V, and then pay attention to the polarity, the power supply pin (VDD) connected to the positive pole, the ground pin (GND) to the negative pole. The data pin (DQ) needs to use a single bus communication protocol to connect the IO port. Finally, join the pull-up resistor, this time the choice of 10k, effectively making the data pins work properly, as shown in Figure 18

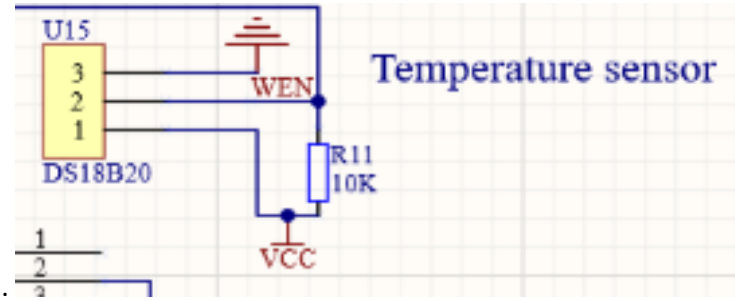

Figure 18 Design diagram of DS18B20

3.2.4 Heart rate sensor circuit design

The heart rate oximetry sensor circuit diagram is shown in Figure 19.

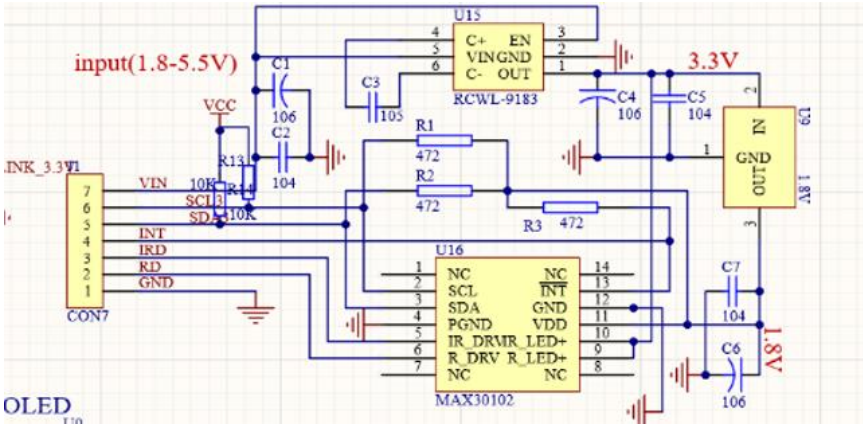

Figure 19 Circuit diagram of the MAX30102 heart rate oximetry sensor

3.2.5 Alarm circuit design

The alarm circuit is shown in Figure 20 below.

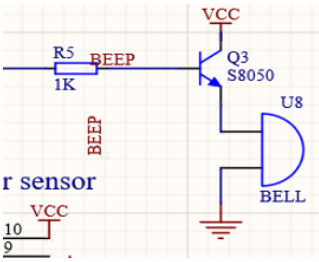

Figure 20 Alarm circuit

In this system, the 8050 transistor plays the role of a switch and is connected to pin PB13 of the STM32F103CBT6 chip, when PB13 outputs a high level, the transistor is in a positive saturated conduction state, the collector potential is pulled low, and the buzzer sounds an alarm (Yang, S., 2019).

At the same time the collector potential is also pulled low, when the collector potential is in saturated conduction state. Since the STM32 microcontroller pins are in high resistance state when connected to the power supply, a 1k resistor R5 is added for current limiting to prevent excessive current.

3.2.6 Design of the GSM circuit

The GSMMODEM communicates with the microcontroller through the serial port, as shown in Figure 21, using the AT command, sending "AT+IPR=X" to set the baud rate and save the parameters (Jiang, L., 2013).

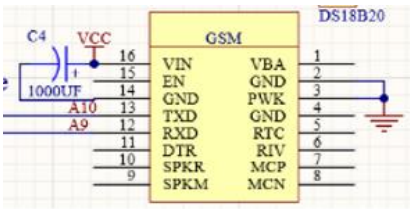

Figure 21 GSM module circuit

Once the STM32 microcontroller detects that the temperature or heart rate exceeds the upper limit that we have set, it sends a text message to the specified cell phone number through the SIM800 SMS module. The 3-axis acceleration module should send a reminder SMS when it detects the presence of a fall condition in the human body.

3.2.7 ADXL345 design of triaxial acceleration circuits

The 7-bit I2C address of the device is 0x53 when using the IIC connection, and then the R/W (read/write) bit further back when using the IIC connection. Connecting the SDO/LTADRESS pin to the VDDIO pin selects the alternate I2C address (Hu, D., & Wang, X., 2015). In this configuration, the 7bit I2C address of the device becomes 0X1D, with the R/W bit followed by.

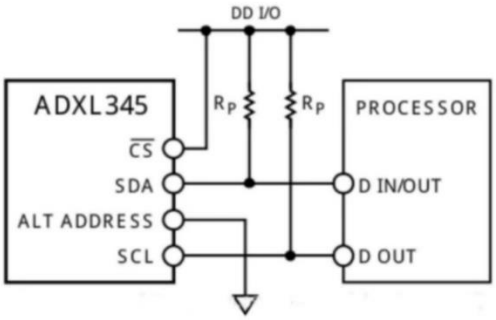

Figure 22 IIC connection diagram

The ADXL345 is a compact, ultra-low power 3-axis accelerometer with high resolution (13bit) and a wide measurement range (±16g). The digital output data is in 16-bit binary complement format and can be accessed via SPI or I2C digital interfaces. Suitable for mobile device applications where static and dynamic acceleration can be measured, it is capable of accurately measuring tilt angle changes of less than 1.0° with high resolution (3.9 milligrams per LSB), and the connection module is shown in Figure 23.

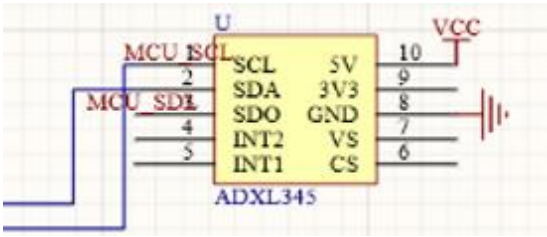

Figure 23 Sensor connection module

3.2.8 Pushbutton circuit design

This design has a total of five buttons: the first button is used to switch between different interfaces: setting the threshold of heart rate, blood oxygen and body temperature, setting the interface of cell phone number, etc. The second button and the third button are used to adjust the size value of the threshold value or the phone number digit, respectively, with the former to increase the value, and the latter to decrease the value, and the last two buttons are one for alarming immediately, and the other one is used for canceling the alarm in case of miscontacts as shown in Fig. 24. Separate key

design is used, while the separate key is that each key will have a separate I/O line connected to the ground, using a low level for operation.

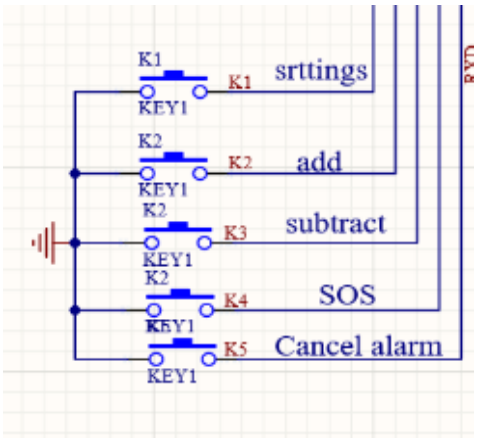

Figure 24 Pushbutton circuit design diagram

3.2.9 GPS circuit design

The GPS signal receiver module used in this design is the VK2828U7, with an average positioning error of 10 meters, a dynamic velocity error of 0.1 m/s, and no SA interference. The signal sensitivity was -142 dB mW. A cold start takes 42 seconds to localize, a hot start takes 38 seconds to localize, and repositioning takes only 8 seconds. Figure 25 shows the upper foot used by the primary.

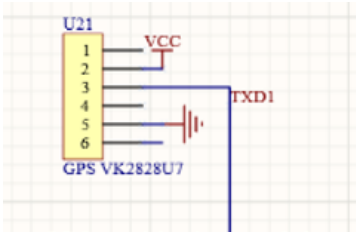

Figure 25 GPS positioning module

4 System software

4.1 Main program flow

After connecting the power supply, the microcontroller initializes and then executes the set program. The main program is shown in Figure 26.

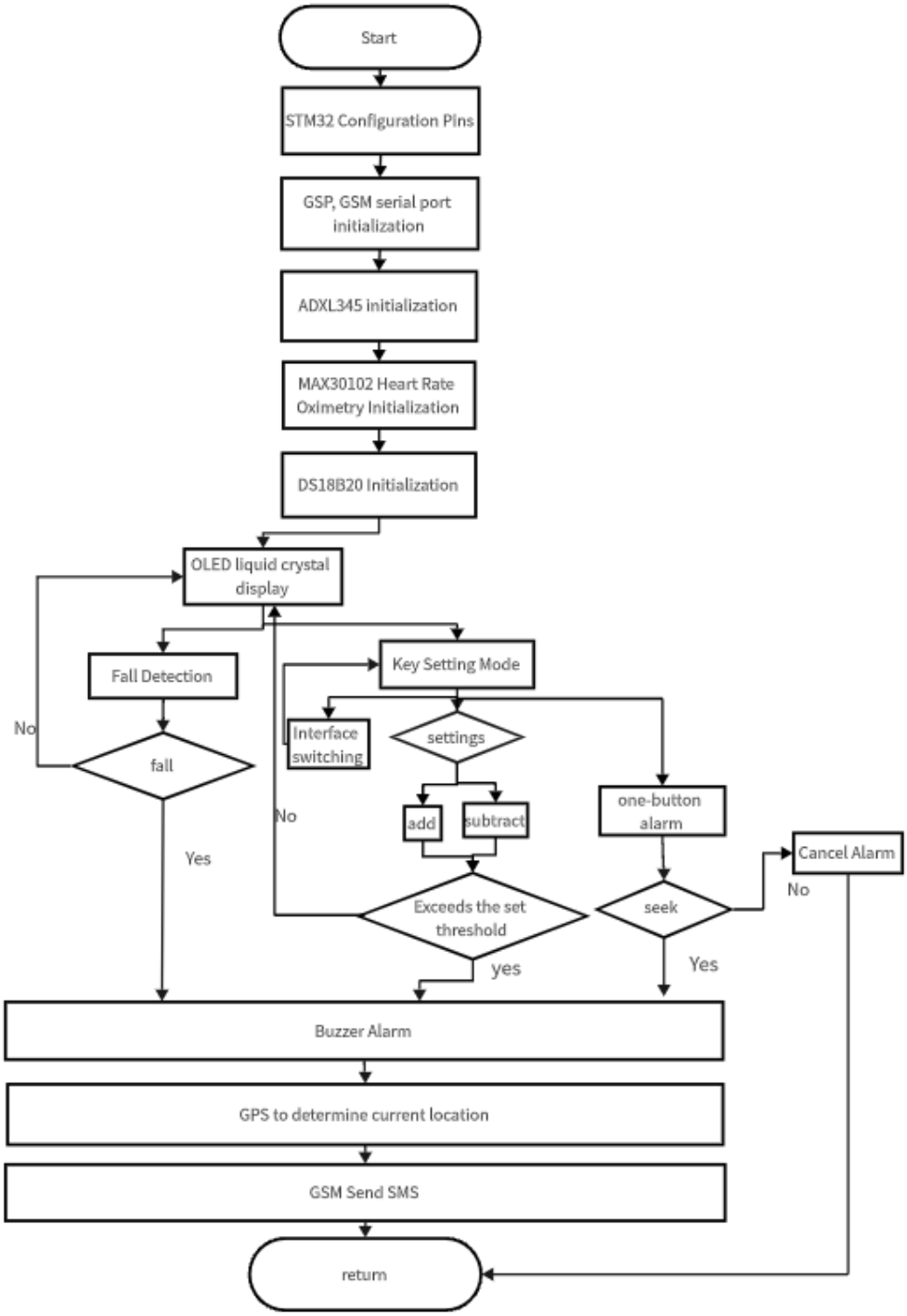

Figure 26 Main program

4.2 OLED liquid crystal display subroutine

The I2C bus utilizes a master-slave structure where the master device is the microcontroller and the memory is the slave device. The bus can be connected to multiple slave devices, or a multi-master structure can be realized. both SDA and SCL signal lines are bi-directional, with an open-drain gate structure, and are connected to the positive power supply through a pull-up resistor (Zhang, J., Zhang, Y., Zhu, Q., etc., 2003). As shown in Figure 27.

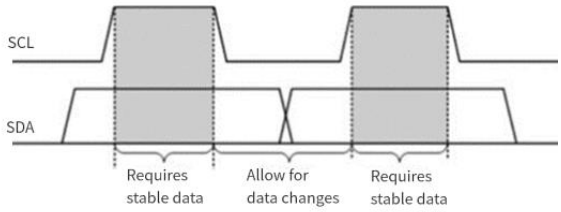

Figure 27 Data Bit validity provisions

Configure the I2C pins with open-drain outputs. Next, the initialization of the I2C module is carried out to ensure that the I2C pins are used, the function I2C_WriteByte for writing data, which includes the operation of sending the register address and data, and then updating the content display, and finally closing the module to end. The flowchart is shown in Figure 28.

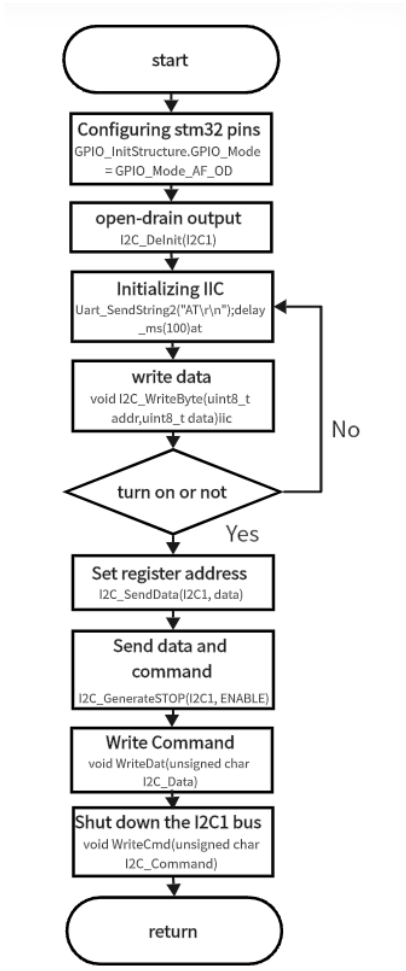

Figure 28 Liquid crystal display program flow chart

4.3 Buzzer alarm subroutine

Alarm circuit using a buzzer, usually working current is relatively large, you need to add a current amplification circuit to be able to add a 1K current-limiting resistor, resistance transistor direct conduction. Pin low, the buzzer does not sound; pin high, the buzzer alarm. Determine the alarm conditions by setting the threshold. The flowchart is shown in Figure 29.

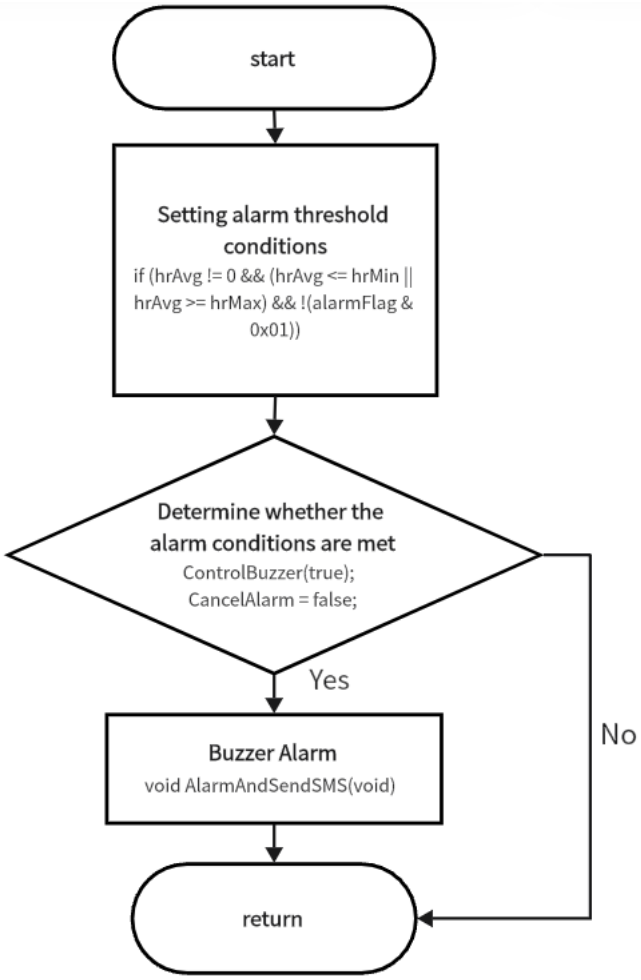

Figure 29 Buzzer alarm subroutine flowchart

4.4 Heart Rate Oxygen Sensor Subroutine

This program is used to display the MAX30102 chip to collect blood oxygen in human heart rate. First initialize the sensor, then read the infrared and red LED data, by calculating the heart rate and blood oxygen saturation, to determine whether the heart rate and blood oxygen saturation is valid, if it is valid, save the data and update the display, if it is not valid, ignore the data of the time.PPG algorithm refers to the photoplethysmographic (photovoltaic volumetric pulse wave) tracing method. The PPG algorithm calculates the an/u ratio of SPO2 and heart rate by detecting the peak of the PPG (photoplethysmographic) cycle and the AC/DC of the corresponding red/infrared signal.

The flowchart is shown in Figure 30.

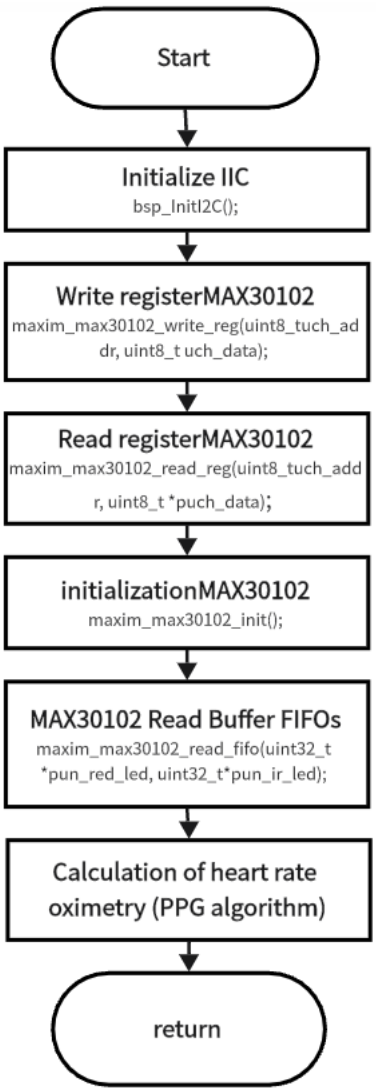

Figure 30 Heart rate oximetry sensor subroutine flowchart

4.5 Temperature sensing subroutine

The DS18B20 is initialized in advance, the temperature value in the DS18B20 is read, the BCD code of the read temperature value is converted to decimal form to output the temperature value, and the final true temperature is calculated (Hu, D., & Wang, X., 2015). The flowchart is shown in Figure 31.

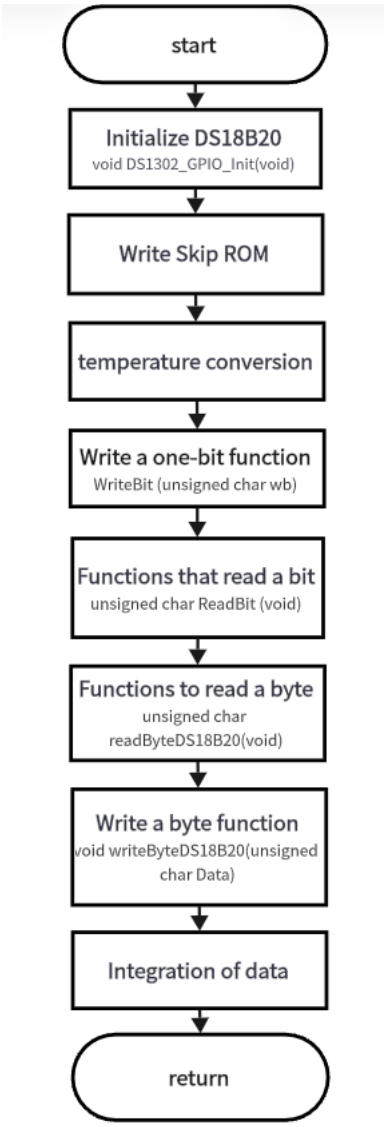

Figure 31 Temperature detection flowchart

4.6 ADXl345 3-axis acceleration module subroutine

The human body undergoes dynamic changes in multiple directions during motion, including accelerations and angles in the horizontal and vertical directions. The XYZ axes correspond to the accelerations ax、ay and az 错误!未找到引用源。 respectively (Tian, J., 2020). The combined acceleration is then：

$$SVM = a = \sqrt{a_x^2 + a_y^2 + a_z^2} \quad (4\text{-}1)$$

The Signal Vector Magnitude (SVM) of the acceleration of the human body is human, with smaller SVM values indicating gentle motion and larger SVM values indicating intense motion (Tian, J., 2020).

During a fall, weightlessness occurs and the combined acceleration reaches its highest point. Therefore, a threshold method can be used to detect a fall (Tian, J., 2020). The flowchart is shown in Figure 32.

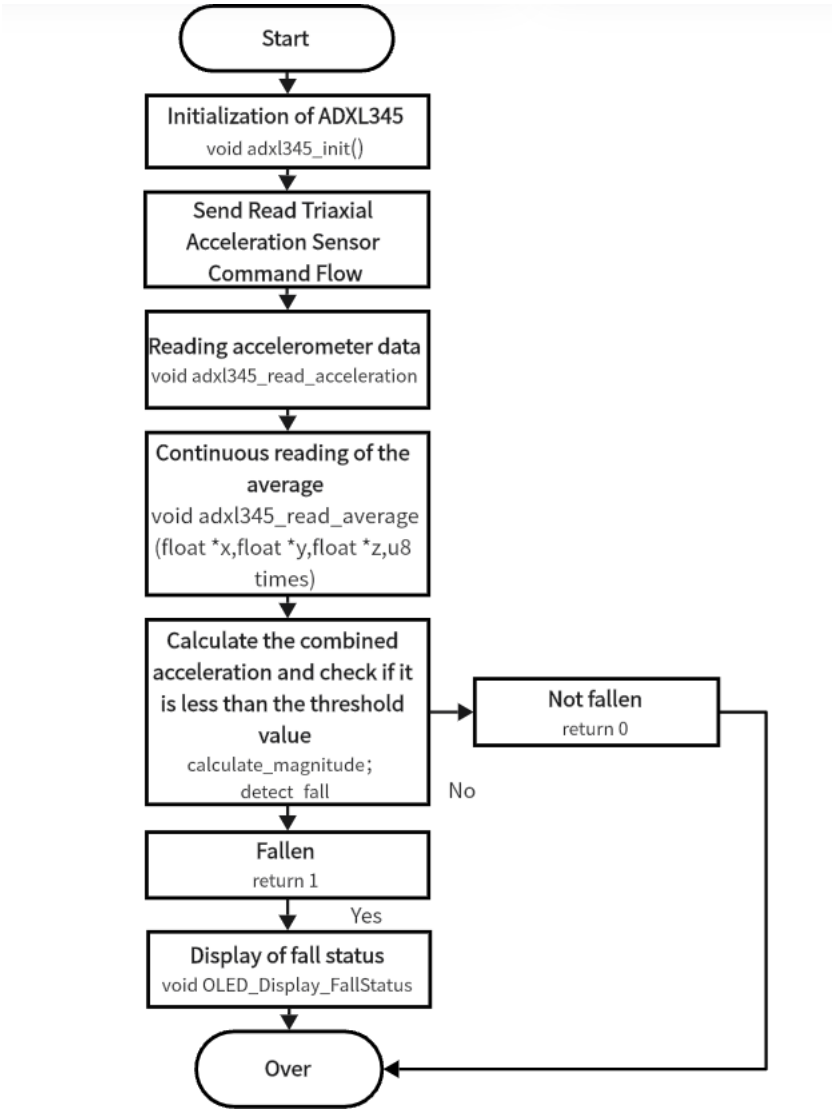

Figure 32 Flowchart of the triaxial acceleration module

4.7 GPS positioning subroutine

First of all, GPS serial port initialization, receive GPS data and then through the txd pin to send data to the stm32 parsing, after parsing the GPS data, to obtain the location information, and after that to determine the success or failure of the GPS positioning, if successful, set the GPS positioning success flag, if failed, set the GPS positioning failure flag flowchart(Zhao, L., Lu, P., Li, T., etc., 2006). As shown in Figure 33:

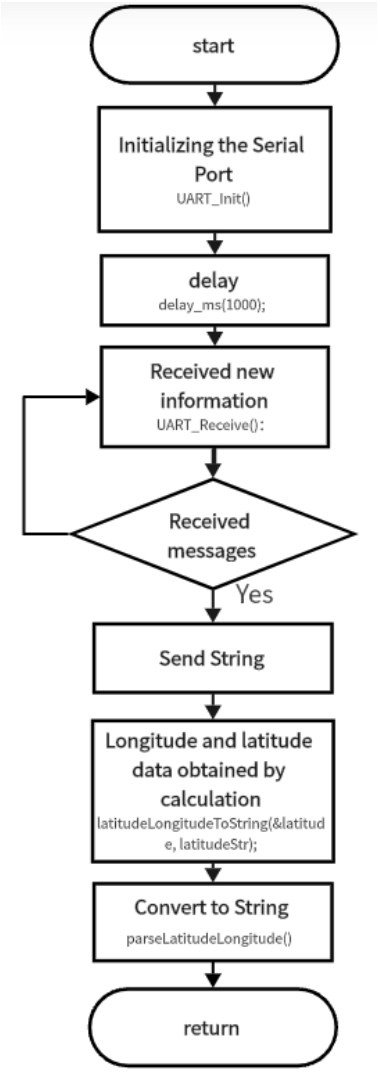

Figure 33 GPS flowchart

4.8 GSM SMS module subroutine

GSM data communication is mainly serial communication, select the timer, initialize the serial port, set the baud rate 9600, use AT command, send "AT+IPR=X" to set the baud rate and save the parameters (Liu, L., 2016). After delay, send SMS. Send 0x1A end symbol for sending is complete. The flowchart is shown in Figure 34.

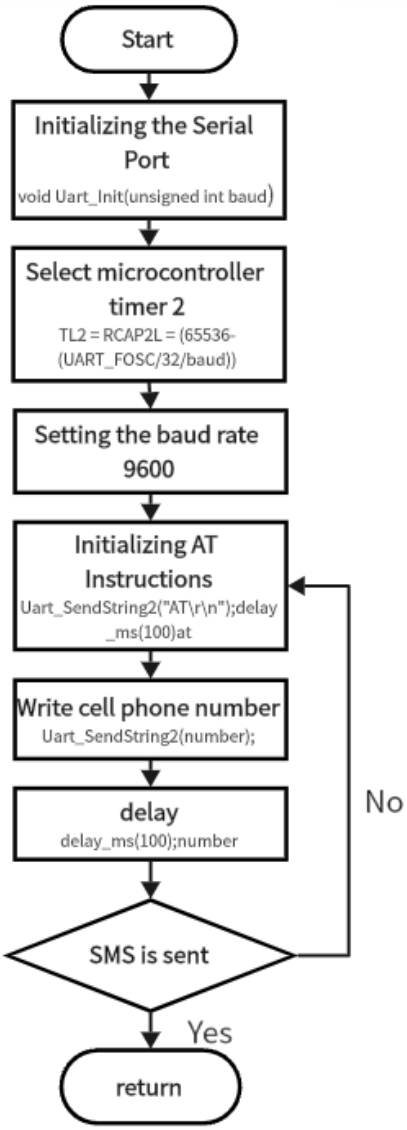

Figure 34 GSM SMS module flowchart

5 Results of system functionality testing

Based on the design of remote elderly live alarm and location management system, the main body consists of four parts: sensing module, display module, microcontroller module and GSM SMS module. The system test is divided into simulation and physical test two parts, through the system function test, to see whether each module is running normally, whether it can monitor the user's data.

5.1 Results of proteus simulation test

It was simulated and tested using Proteus simulation software. Since the temperature sensor inside the proteus 8.11 can be used directly, but the heart rate oximetry sensor and the triaxial sensor do not have ready simulators, so we will convert whether it falls or not into an analog signal, the pulse signal is used to simulate the heartbeat, and by installing an oscilloscope to see the signal change, and the oximetry signal is simulated through a relay. After passing the simulation it will be further soldered as shown in figure 35.

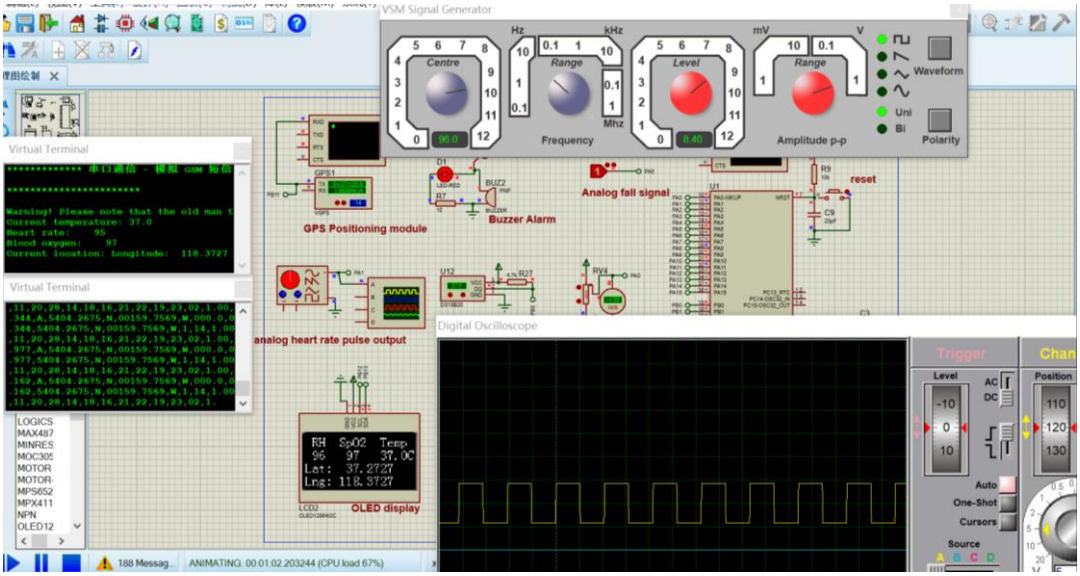

Figure 35 Proteus simulation diagram

2）Proteus Fall Test

Because there is no way to directly simulate whether or not a fall occurs, we convert whether or not a fall occurs into an analog signal, displaying the number 0 (blue state) as a signal simulating no fall, and displaying the number 1 (red state) as a signal simulating a fall that has occurred.

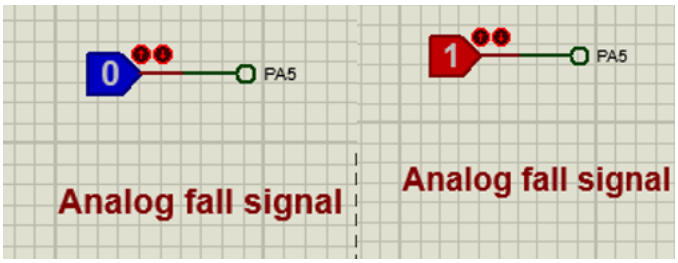

Figure 36 Fall simulation chart

3）Proteus Heart Rate Detection

Pulsed signals are used to simulate a heartbeat and we can view the signal changes by installing an oscilloscope.

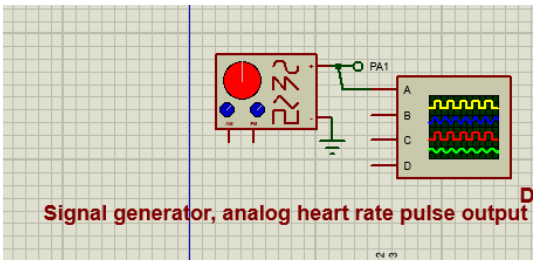

Figure 37 Heart rate simulation chart

Toggle the first CENTRE to simulate heart rate changes.

Below are the oscilloscope signals corresponding to different heart rates. From the graphs below, we can see that the narrower the waveform, the higher the heart rate; the wider the waveform, the lower the heart rate (the first picture has the narrowest waveform, corresponding to a heart rate of 114; the last picture has the widest waveform, corresponding to a heart rate of 37).

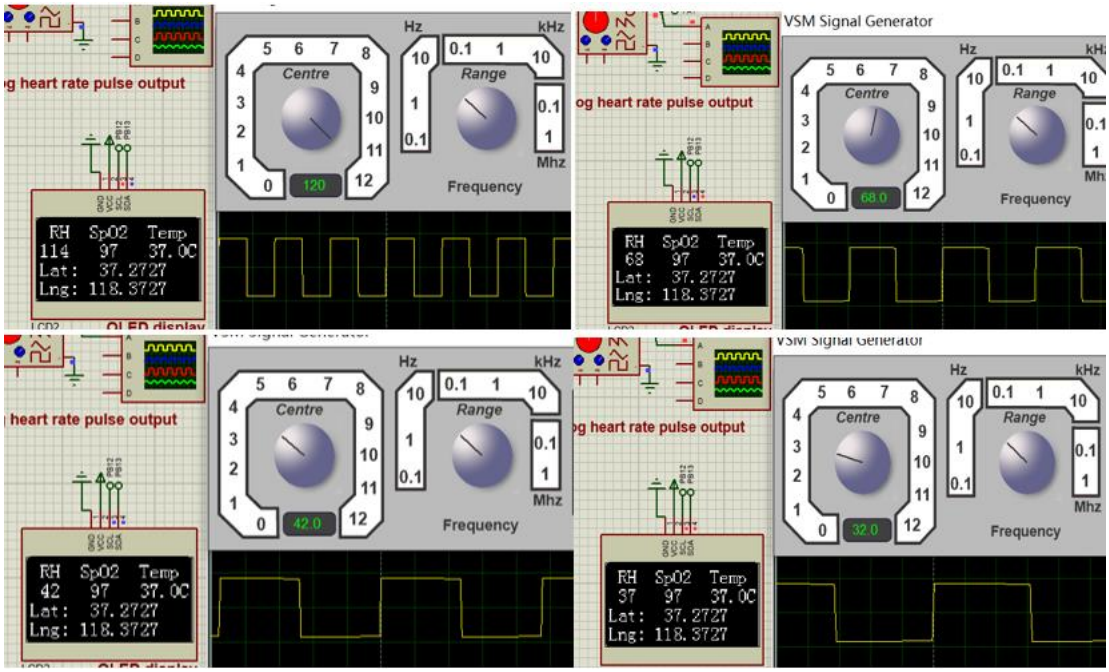

Figure 38 Plot of data changes for heart rate simulation

4）Proteus Blood Oxygen Test

Simulation of blood oxygen signals through relays (adjustment of the magnitude value of the blood oxygen digital signal through up and down arrows).

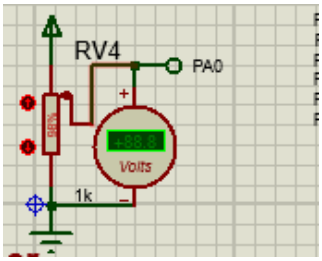

Figure 39 Oxygen simulation chart

5）Proteus simulation function test

Press the simulation button, the interface of GPS latitude and longitude and receiving warning SMS will pop up, and the buzzer alarm can be heard when the threshold is exceeded, and the changes will be reflected on the OLED display by adjusting the values of the heart rate and blood oxygen sensor in the simulation, the value of the body temperature, and whether it falls or not, as shown in Figure 40.

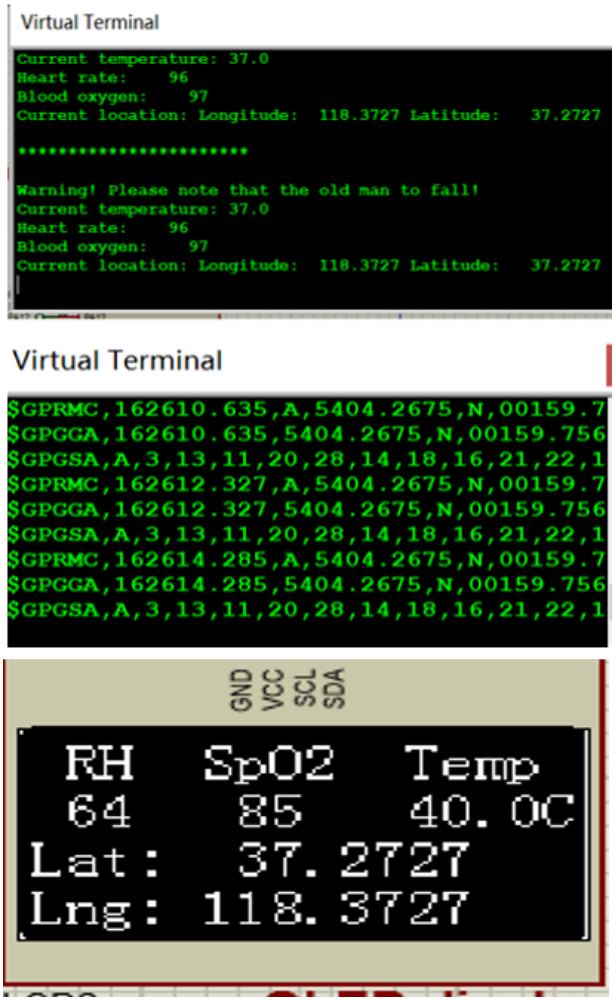

Figure 40 GSM and GPS display results chart

5.2 Results of physical operation test

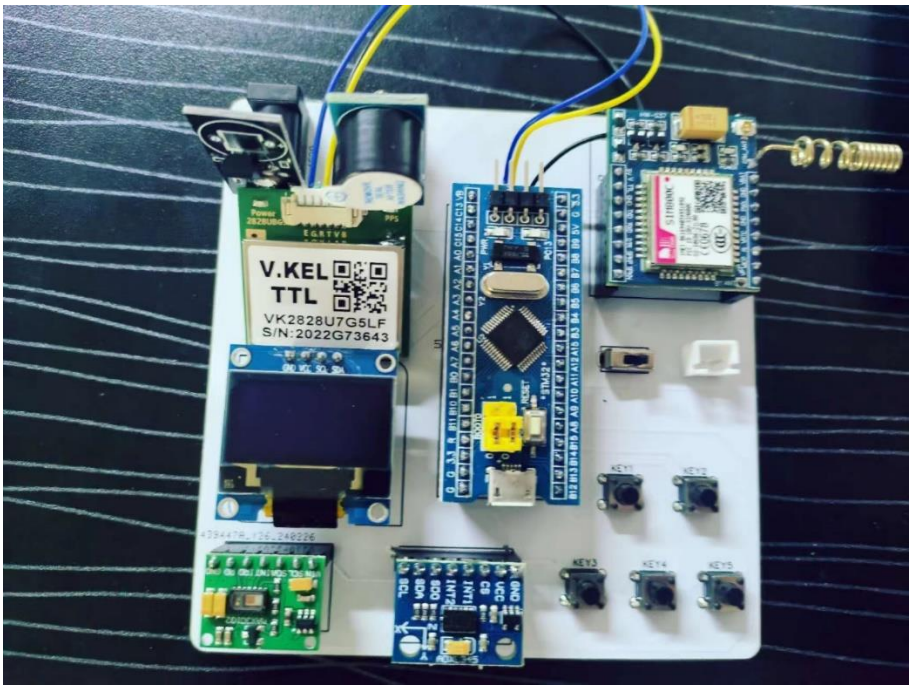

Figure 41 Concrete drawing

(1) Heart rate and blood oxygen sensing module test

Connect to the power supply, the red LED light of the heart rate and blood oxygen sensor is on, as shown in Figure 42, the circuit connection is detected correctly, and the sensor can work. Put your hand over the red light to start the heart rate and blood oxygen measurement.

Figure 42 Red light is always on when the heart rate sensor is working

(4) Display module and microcontroller module test

Turn on the power, the red light of the microcontroller flashes, and the display shows the initialization content, as shown in Figure 43. Next test on different objects, the display can refresh the data in time. After testing, the data processing ability of the microcontroller and the display screen display function is normal.

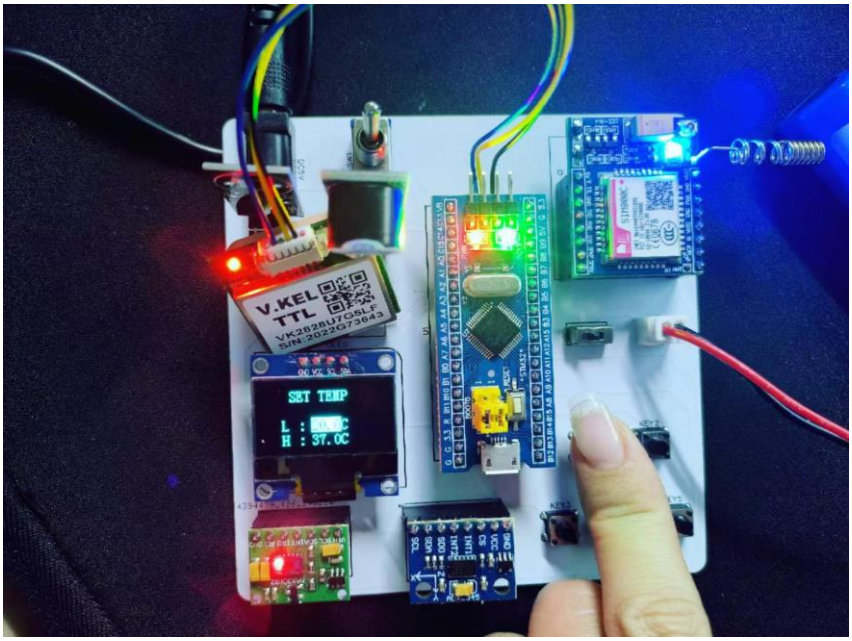

Figure 43 Display module and microcontroller module testing

5) GSM module test

SIM800C is used as the SMS module, you need to insert a small phone card before use, if it is a mini card you need to transfer the card holder, follow the instruction tutorial on the back of SIM800C to insert the card, as shown in Figure 44.

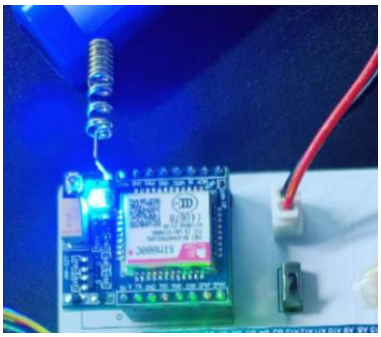

Figure 44 SIM800C working scenario

Connect an external battery to supply power to the GSM module separately. Turn on the separate power supply switch, the blue light on SIM800C starts to flash rapidly, wait for some time and then the blue light starts to flash slowly, proving that the signal connection has been found successfully. As shown in Figure 45.

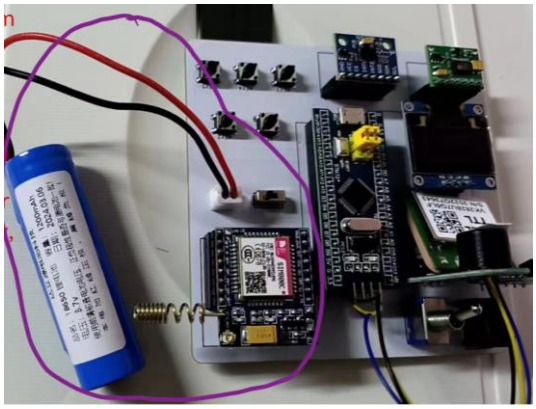

Figure 45 External power supply for SIM800

(6) the elderly fall alarm test

This experiment uses the ADXL345 three-axis acceleration sensor to test the elderly fall or not, the test, keep the board to remain upright to prove that the elderly did not fall, when the board is flat, it proves that the elderly have fallen, at this time the OLED display will show the FALL, keep this position does not move, after a period of time the buzzer will sound an alarm, the cell phone will receive the old man has fallen the text message, the text message content in addition to the alarm content of the fall alarm also contains heart rate, blood oxygen, body temperature data, and the location of the latitude and longitude at this time. In addition to the content of the fall alarm, it also contains the old man's heart rate, blood oxygen, body temperature data, and the latitude and longitude of the old man's location. In order to find the old man in time and provide appropriate help.

Observe the data in Figure 46, the screen display content for the elderly at this time the state, and the elderly fall and get up after receiving SMS alerts, as shown in Figure 47, the measurement function is normal and the data is more stable.

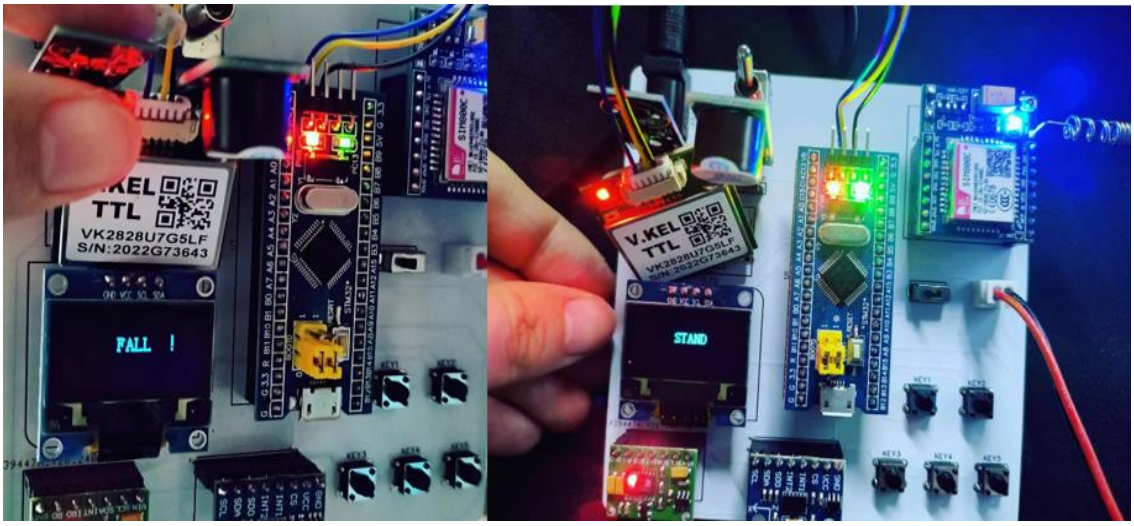

Figure 46 Physical drawing of an elderly person falling down and getting up

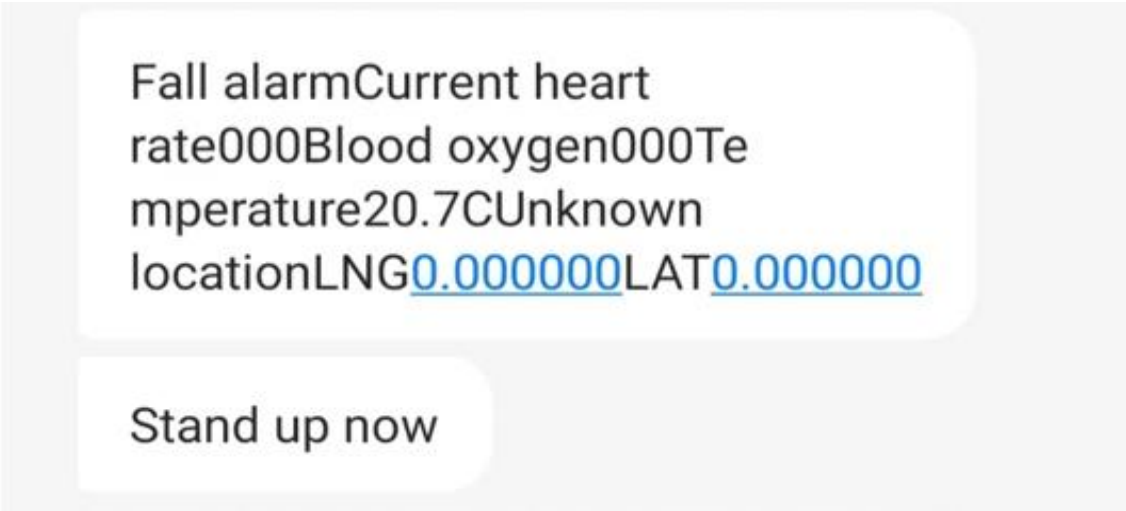

Figure 47 SMS received by the old man after falling and crawling

If the elderly alone when an unexpected situation occurs, the urgent need for help, or Alzheimer's disease elderly lost to find home, press the fourth button, this time the buzzer will be directly issued by the alarm, to remind the pedestrians around the elderly in need of help; designated cell phone at this time will receive a distress text message and contains the old man at this time at this moment the latitude and longitude, to facilitate the finding of the old man, such as shown in Figure 48 and 49.

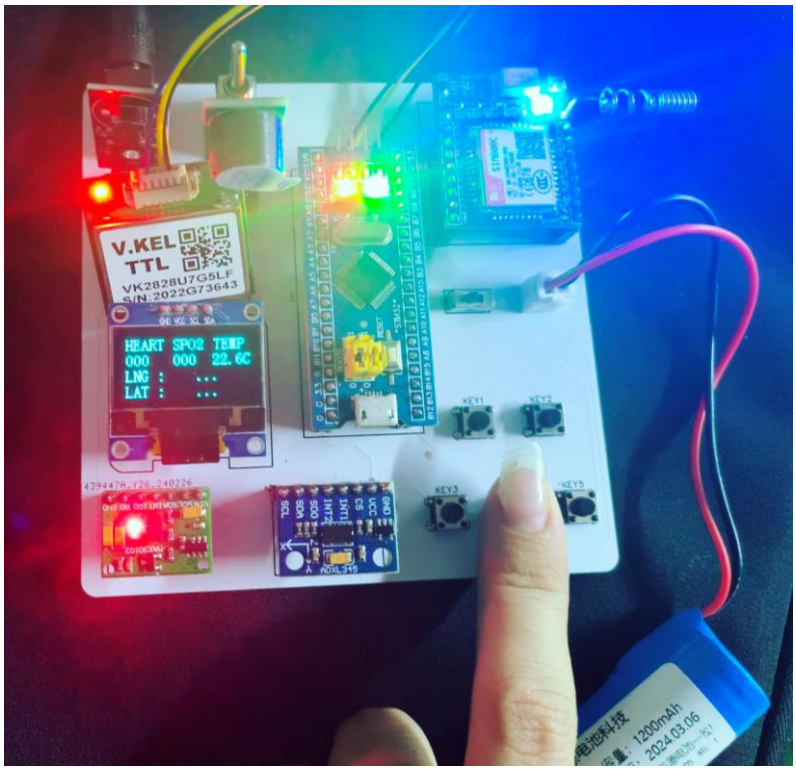

Figure 48 Physical diagram of holding down the fourth button

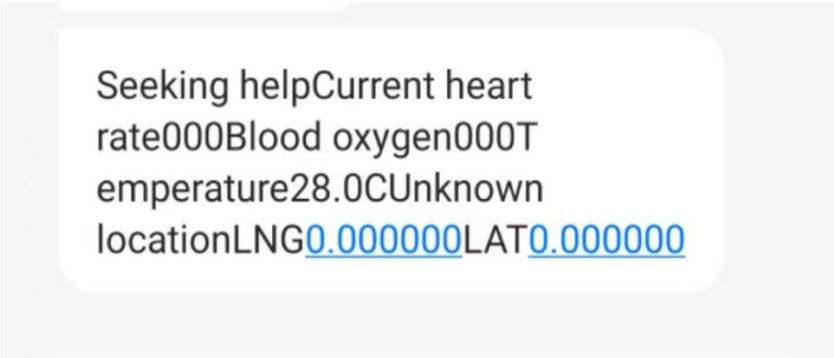

Figure 49 Receiving SMS after seeking help

Press the first button, the screen enters into the setting page from the main interface, keep pressing to keep switching the interface. Press once to enter the heart rate threshold setting interface, press once again to adjust the heart rate maximum threshold, press the second time to adjust the heart rate minimum threshold. The second button is used to make the value increase, and the third button is used to make the value decrease. If the elderly person's heart rate is not within the set range, the designated cell phone will receive a corresponding alarm text message and the buzzer will sound an alarm to warn the elderly person, as shown in Figures 50 and 51.

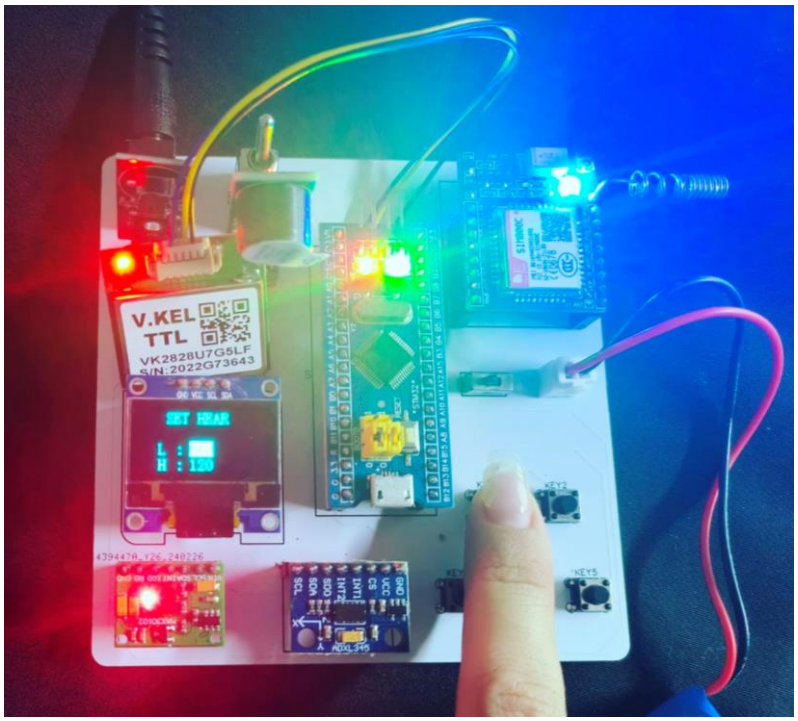

Figure 50 Heart rate threshold modification interface

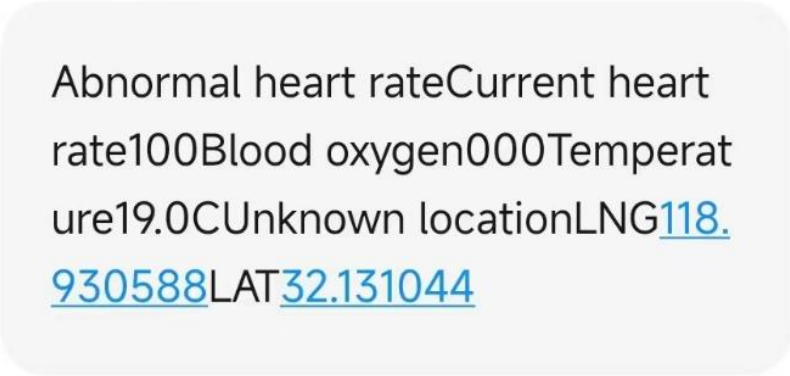

Figure 51 Alarm SMS received when heart rate exceeds the threshold value

Continue to press the first button to switch to the blood oxygen threshold setting interface, the normal value of blood oxygen is generally between 95~100, so the threshold of blood oxygen only needs to set the lower limit, press the second button to add, press the third button to reduce. If the old man's blood oxygen concentration is no longer within the threshold, the designated cell phone will receive the corresponding alarm text message, the buzzer will sound an alarm to warn the old man himself, as shown in Figure 52 and Figure 53.

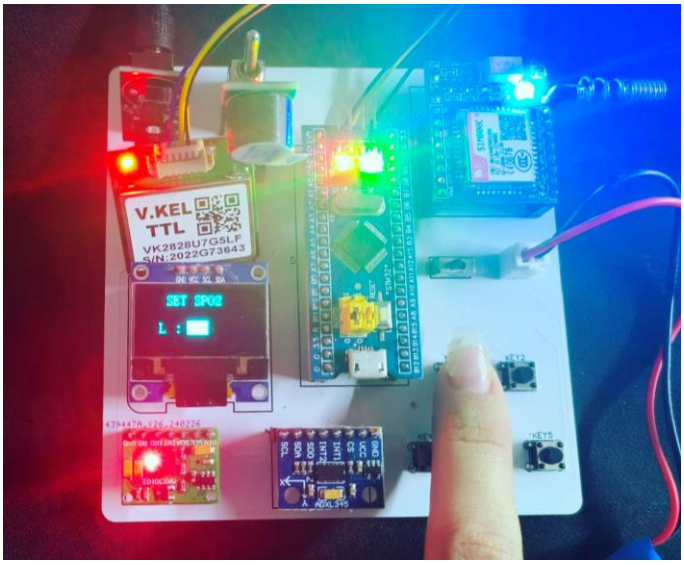

Figure 52 Blood oxygen threshold modification interface

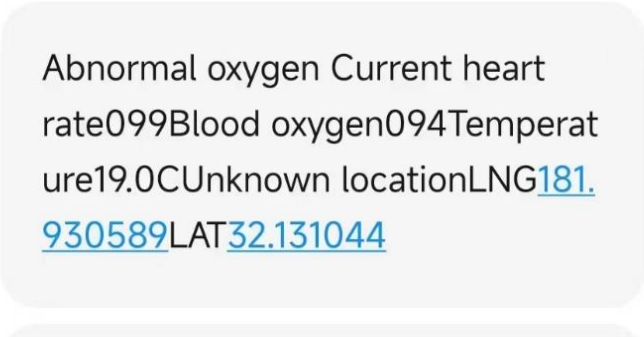

Figure 53 Alarm SMS received when blood oxygen exceeds the threshold value

Continue to press the first button to switch to the temperature threshold setting interface, press the second button to add and the third button to subtract. If the body temperature of the elderly is no longer within the threshold, the designated cell phone will receive the corresponding alarm SMS, and the buzzer will sound an alarm to warn the elderly themselves, as shown in Figure 54 and 55.

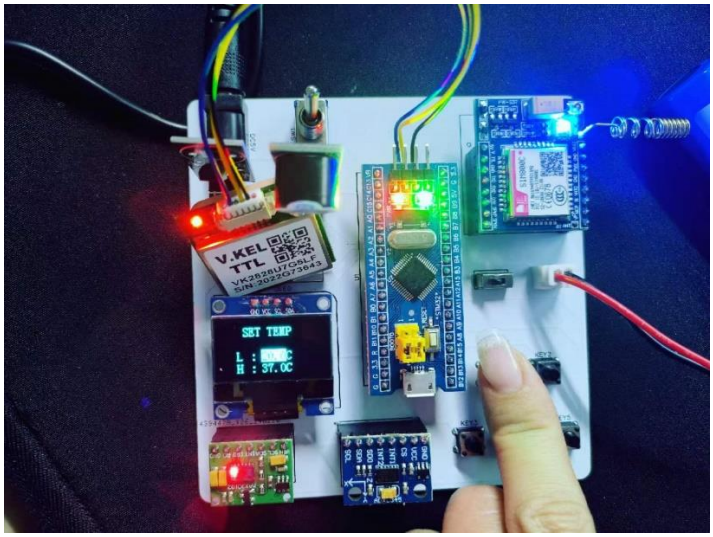

Figure 54 Temperature threshold modification interface

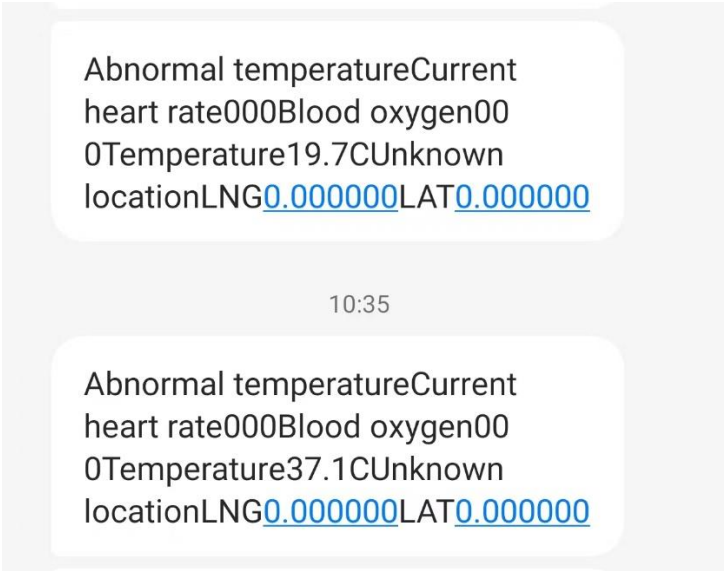

Figure 55 Alarm SMS received when body temperature exceeds the threshold value

Continue to press the first button to switch to the designated cell phone number setting interface, press the second button to add and the third button to subtract. After the cell phone number is set successfully, this cell phone number will be able to receive all the warning SMS for the elderly, as shown in Figure 56.

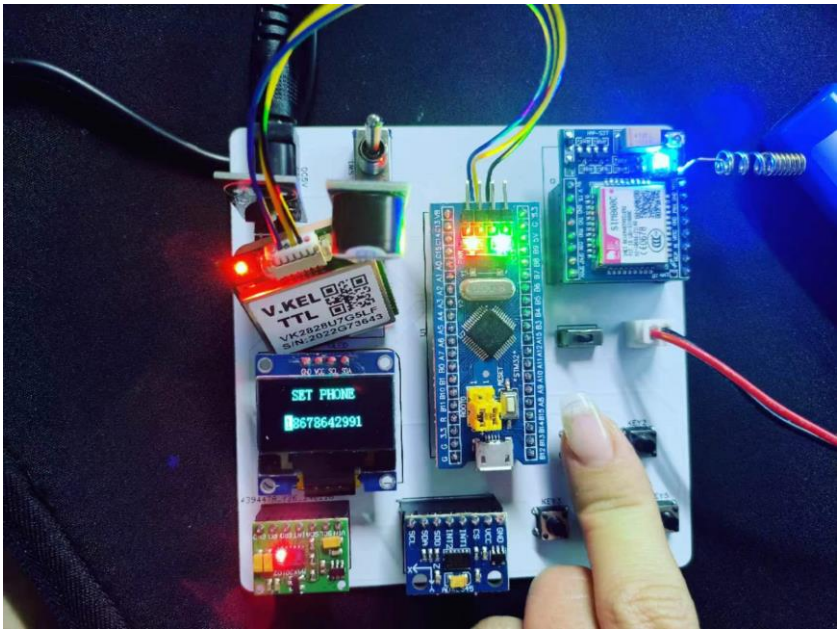

Figure 56 Designated receiving SMS phone number modification interface

The GPS module can only receive signals in an empty outdoor area. Indoors, the blinking of ... (suspension points) will appear all the time, indicating that it is searching for a signal, and the red light of the GPS module will be on at this time. After finding the signal, the green light starts to flash slowly, as shown in Figure 57.

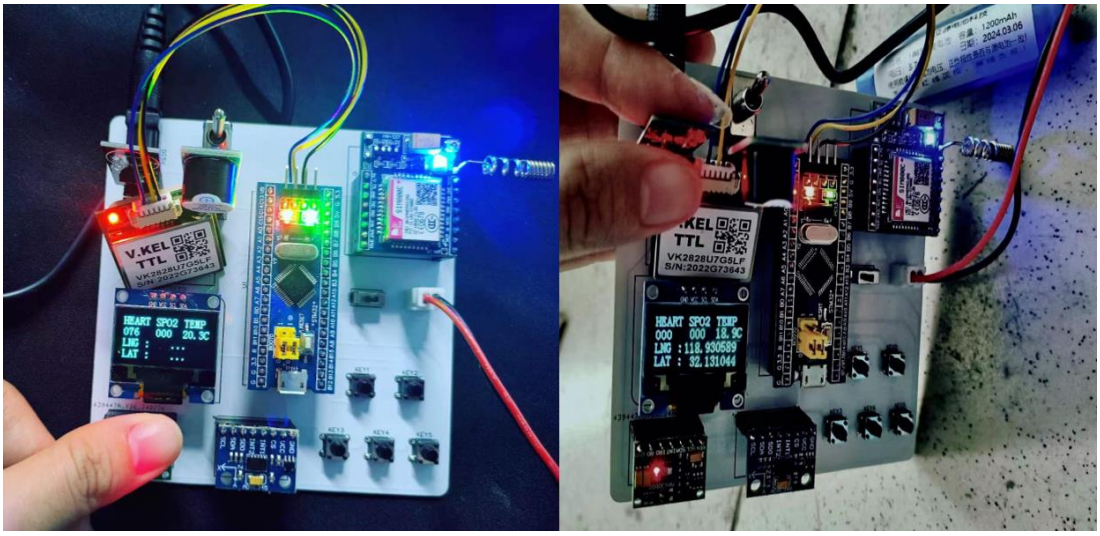

Figure 57 Different experimental results of GPS module indoors and empty outdoors

6 Discussion and Conclusion

This project implements about the design and development of remote elderly live alert and location management system based on STM32F103C8T6 microcontroller. During the project research, I mastered the skills of hardware circuit design, circuit schematic and PCB wiring diagram drawing. At the same time, I studied STM32 microcontroller and its peripherals development in depth and used Proteus software for simulation and testing.

Different modules are used to realize the acquisition of different signals, such as: heart rate temperature sensor, ADXL345 acceleration sensor and GPS module to monitor the physiological information of the elderly, determine whether a fall has occurred, and real-time acquisition of positional information ultimately displaying the results on the OLED LCD screen. When the old man is lost or when special conditions occur, he can press the send button by himself, then he can send the location information to his cell phone, which can be used for timely alarm or location.

In the process of project development, I actively consult the relevant information, in-depth analysis of system requirements, and combined with the basic knowledge of microcontroller to design the system circuit and through the proteus program related simulation test. This study not only strengthens my welding skills, but also enhances the basic skills that I have mastered in my university study, and the combination of practice and theory has achieved good results.

On the basis of this design, more modules can be added in the future to realize all-round health monitoring for the elderly, such as pedometer design, blood pressure design and so on. If this system is made into a physical object, making a pocket watch may be a better idea than a watch. The wrist is more flexible, the probability of triggering a fall misjudgment is greater; while the neck mobility is relatively small, when the pocket watch is hanging vertically, it is judged that it has not fallen, and when it falls, the pocket watch will be flattened, and the probability of triggering a fall misjudgment is smaller.

7 References

Su, Y., Huang, Z., & Wen, R. (2023, December 15-17). Design of home health monitoring system based on STM32, *2023 IEEE 6th International Conference on Automation, Electronics and Electrical Engineering* (AUTEEE), Shenyang, China, 10.1109/AUTEEE60196.2023.10408684.

Qin, Y. (2013). Research and Design of Elderly Fall Detection Device (Master dissertation). Dalian Maritime University.

Pei, L. (2017). Research on Fall Detection Method and System Based on Support Vector Machine (Master dissertation). Shanghai Jiao Tong University.

Qu, L. (2016). Research on Near-Infrared Transmissive Blood Oxygen Content Monitoring System (Master dissertation). Harbin University of Science and Technology.

Zhang, J., & Chen, H. (2010). Digital Thermometer Based on MSP430 Microcontroller and DS18B20. *Electronic Design Engineering,*18(11):106-109.

Cui, H. (2013). Temperature Verification System for Sterilizers. *China Science and Technology Review*, (20): 16-16.

Liu, X., & Zhang, Y. (2019). Wireless Remote Temperature and Combustible Gas Detection System. *Electronic World*, (17):138-139.

Wu, J. (2007). Design and Implementation of Embedded Wireless Data Acquisition System (Master dissertation). Beijing University of Science and Technology.

Chen, Q. (2010). Application of OLED Display Based on Single Chip Microcontroller. *Science Friend: Later*, (08):8-10.

Li, Y. (2008). Multi-Functional Menu Design Using OLED as the Operating Panel. *Electronic Science*,(14),16-17.

Zhang, F. (2009). Research on Transmission Line Vibration Monitoring Device Based on Accelerometer (Master dissertation). Chongqing University.

Su, R. (2010). Research and Implementation of Digital Home Control System (Master dissertation). Northeastern University.

Zhang, Y. (2014). Design and Development of Remote Temperature Measurement System for Transmission Line T-Joints (Master dissertation). Hebei University of Technology.

Ma, J., Tang, L., & Wu, Y. (2022). Design of Energy-Saving Lighting Control System Based on Single Chip Microcontroller. *Computer Knowledge and Technology*, (22),95-97+102.

Yang, N., Chen, Y., & Yang, J. (2021). Simulation System for Infusion Monitoring Based on Microcontroller. *Changjiang Information Communication*, (08), 79-81.

Qin, Q. (2010). A New Temperature Acquisition Scheme Based on DS18B20. *Electronics Technology*, (10),62-64+57.

Yang, G. (2021). Vital Signs Data Acquisition and Health Warning Protection System (Master dissertation). Hebei University of Science and Technology.

Yang, S. (2019). Design and Implementation of Infusion Monitoring System Based on WIFI Technology (Master dissertation). Kunming University of Science and Technology.

Jiang, L. (2013). Remote Control Setting of LED Display Screen Based on GSM (Master dissertation). Soochow University.

Hu, D., & Wang, X. (2015). Inclination Measurement System Based on ADXL345 Three-Axis Accelerometer. *Electronic Testing*, (19),113-115.

Xu, C. (2015). Hardware Design of Liquid Crystal GPS Based on Microcontroller. *China New Communication*, (13),99-100.

Fu, R., Ren, P., Wang, R., & Qi, B. (2009). Design and Implementation of Zigbee Wireless Network Node Based on GPS Receiver. *Proceedings of the 14th National Youth Communication Academic Conference* (pp. 929-934). School of Electronics and Information Engineering, Xi'an Jiaotong University.

Zhang, J., Zhang, Y., Zhu, Q., & Mou, L. (2003). Application Technology of I2C Bus in Low Current Ground Selection Protection Device. *Electrical Engineering Technology*, (09),16-17.

Tian, J. (2020). Design and Implementation of Intelligent Elderly Bracelet Based on STM32 (Master dissertation). Nanjing University of Posts and Telecommunications.

Zhao, L., Lu, P., Li, T., & Chen, Z. (2006). Research on Combined Navigation and Guidance Simulation Technology Based on High-Speed Local Area Network. *Journal of System Simulation*, (07), 111-114.

Liu, L. (2016). Research and Implementation of Key Technologies for Electronic Intelligent Clothing (Master dissertation). Beijing Institute of Fashion Technology.

8 Appendix

8.1 Total Circuit Design

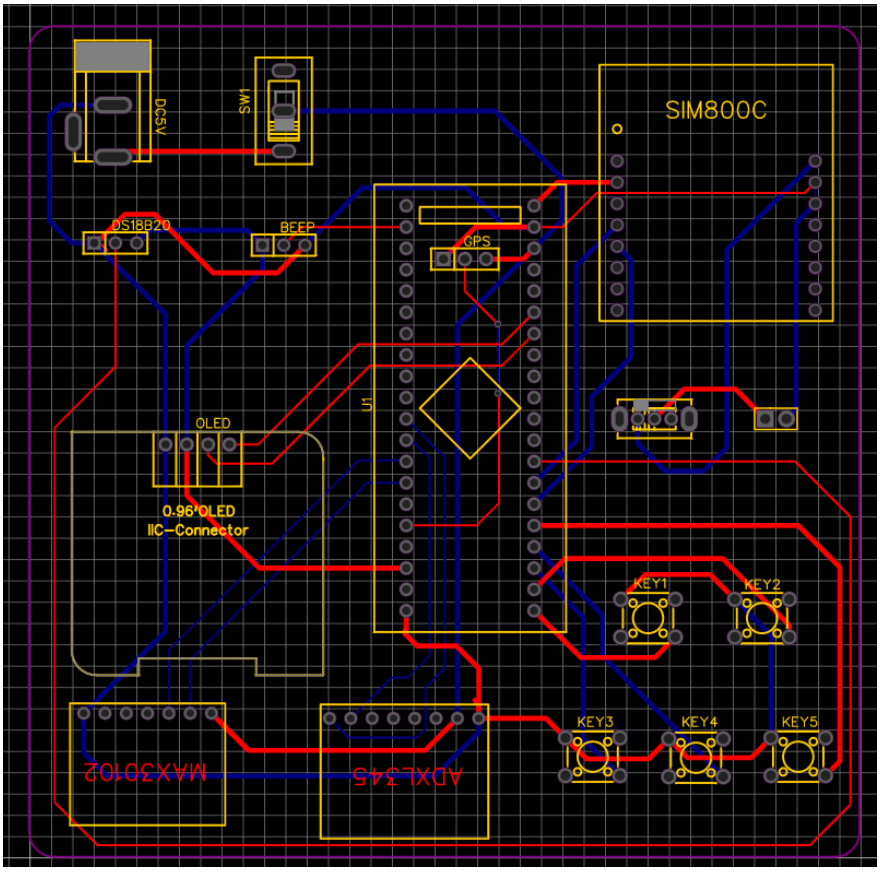

Figure 58 Circuit schematic PCB version

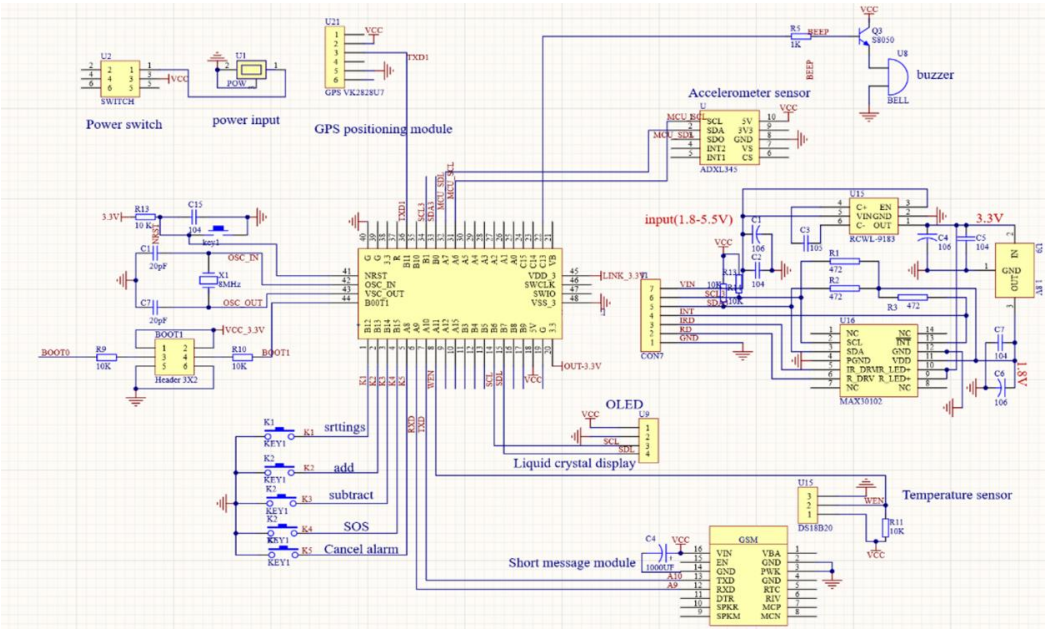

Figure 59 Circuit schematic

8.2 Component list

specification	name	label	quantity
1000UF	electrolytic capacitor	C4	1
KEY1	Key	K1, K2, K5	5
S8050	audion	Q3	1
1K	resistance	R5	1
10K	resistance	R11,R13,R14	3
ADXL345	Three-axis sensor	U	1
POW	Power source	U1	1
SWITCH	Switch	U2	1
BELL	buzzer	U8	1
OLED	LCD display	U9	1
SIM800	SMS module	U13	1
DS18B20	Temperature sensor	U15	1
GPS VK2828U7	GPS module	U21	1
MAX30102	Heart rate oxygen module	J1	1

Figure 58 Component list